PAHN-PaN – Lattice QCD contribution

Bielefeld (2,3), Bonn (1,2), DESY-Zeuthen (1,2), Frankfurt, FZ-Juelich (1,2,3), Mainz, Munich (3), Regensburg (1,3), Wuppertal – (1,2,3) task areas

International collaborations:

Budapest-Marseille-Wuppertal Collaboration
European Twisted Mass Collaboration
HotQCD Collaboration
Coordinated Lattice Simulations effort (CLS): Alpha, Mainz, RQCD…..

participation in international software development&optimization efforts

- GRID library
- QUDA library
- SciDAC-4 (Scientific Discovery through Advanced Computing)

HotQCD: An example for an international Lattice QCD Collaboration

Summit@ORNL

Cori@NERSC

Marconi@Cineca

PizDaint@CSCS

JUWELS
@FZ-Juelich

Bangalore-Bielefeld-BNL-Chennai-Michigan-Regens-burg-Tsukuba-Wuhan

– utilizing a heterogeneous compute environment
– taking care of more than 10 million data sets using ~ 3PB data

NSC3@CCNU

GPU Cluster@Bielefeld

XIPhi XVI@JLab

QPACE 3
@FZ-Juelich

Optimization of analysis software

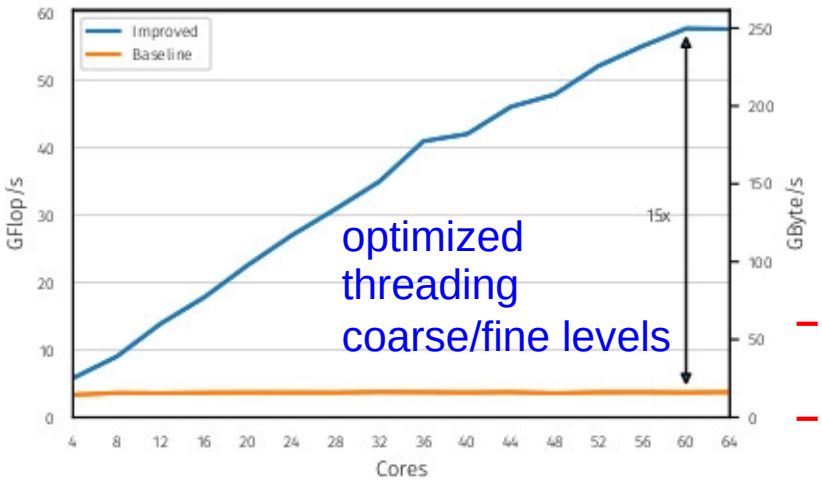

Multigrid for Wilson Fermions in Grid
Regensburg-Edinburgh,
PoS Lattice 2018

– **high level portable algo.**
– **low level optimization**

– enable software tools to work and run efficiently on highly parallel and heterogeneous architectures

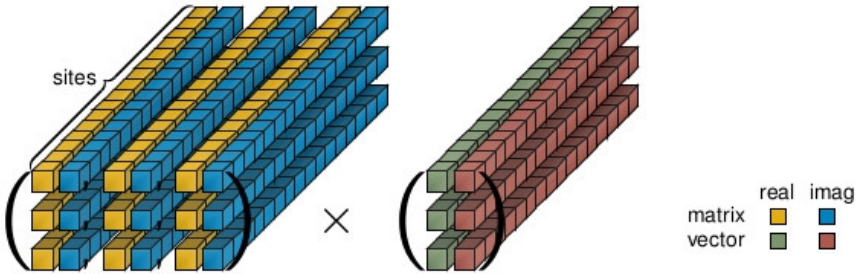

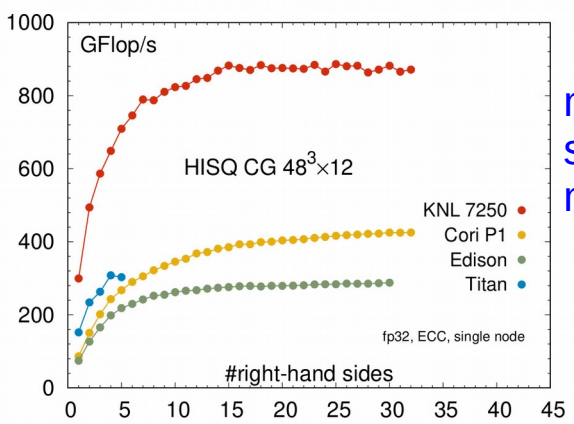

multiple right hand side solver optimizes memory access

Conjugate gradient solvers on Intel Xeon Phi and NVIDIA GPUs, Bielefeld-BNL-NVIDIA,
PoS Lattice 2014

Prepare for usage of new hardware

future Fujitsu A64FX processor

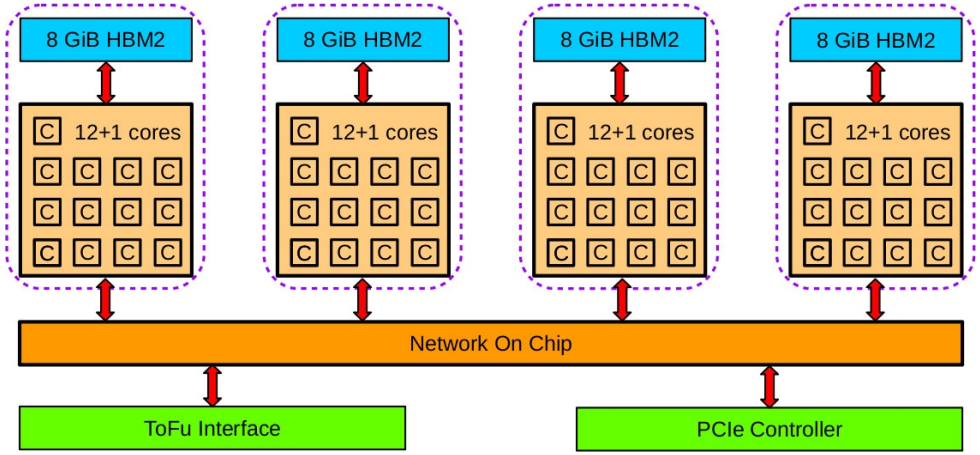

NVIDIA – NVLink interconnect

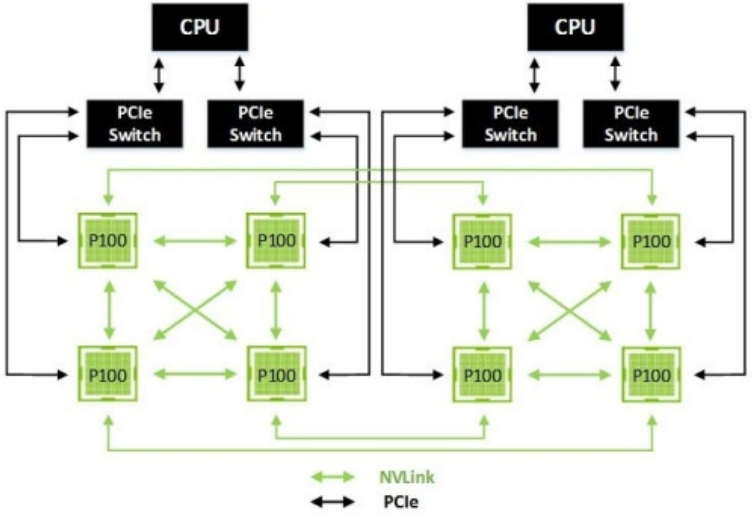

Lattice QCD on upcoming Arm architectures, Regensburg, PoS Lattice 2018;

SVE-enabling Lattice QCD Codes, Regensburg, FZ-Juelich, 2018 IEEE International Conference on Cluster Computing

– adapt analysis software to new hardware architectures;
– develop efficient multi-GPU and multi-node inverter for sparse matrices

Analysis software specific to German lattice QCD community

- develop, maintain and contribute to lattice QCD specific libraries (GRID, QUDA,…)
- making software tools, specific to German research profile, available to a wider community
  - implementing efficient solvers (multigrid, deflated CG, block solver) in a platform independent way as well as providing highly optimized platform specific solutions
  - provide higher level analysis code for the efficient evaluation, construction and storage of n-point Greens functions (Regensburg) as well as high order moments of charge fluctuations (Bielefeld)

Contribution to task area 3

(i) develop and maintain interfaces to the libraries used in the lattice QCD community to ensure compatibility with the data and meta-data formats as well as the middleware developed in task areas 1 and 2

(ii) develop and maintain new analysis software specific to the German lattice QCD research programs that are related to the experimental programs at RHIC@BNL, LHC@CERN, the future FAIR facility at GSI as well as planned next generation accelerators such as EIC, FCC etc.

(iii) adapt the hardware abstraction layer of existing analysis software to new hardware architectures, such as ARM SVE, next generation GPUs, etc.

(iv) enable our software tools to work and run efficiently on highly parallel architectures, including the analysis of partitioned data. This also requires the architecture-specific optimization of workflow for heterogeneous computing platforms in terms of computing vs. memory efficiency.