The CAST-CAPP/IBS Detector Project: Progress and Challenges

Lino Miceli
IBS Center for Axion and Precision Physics Research (CAPP/IBS)
At the Korea Advanced Institute of Science and Technology (KAIST)
Daejeon, Republic of Korea

12th PATRAS Workshop on Axions, WIMPs and WISPs
20-24 June 2016
Jeju Island, South Korea

Axion Search Motivation

Solves the strong CP problem

A cold dark matter candidate

A search based on axion coupling to two photons in the presence of a strong magnetic field

$$\mathcal{L} = -g_{a\gamma\gamma} a(t) \boldsymbol{E}(\boldsymbol{t}) \cdot \boldsymbol{B}$$

$g_{a\gamma\gamma}$ coupling constant

$a(t)$ axion field

B provides a virtual photon enhancing the conversion probability

E(t) electric field associated with the outgoing photon

Detection

Haloscope: axion-to-photon conversion probability is further enhanced in a microwave cavity that resonates to the frequency of the axion mass (Sikivie).

On-resonance axion conversion power in a microwave cavity

$$P \approx g_{a\gamma\gamma}^2 \left(\frac{\rho_a}{m_a}\right) \boldsymbol{B^2 \cdot Q \cdot V \cdot C}$$

$$Q = 2\pi f \frac{\text{Stored Energy}}{\text{Power Loss}}$$ Quality factor

$$C = \frac{1}{B_0^2 V} \frac{\left|\int \boldsymbol{B}\cdot\boldsymbol{E} d^3x\right|^2}{\int \boldsymbol{E}\cdot\boldsymbol{E} d^3x}$$ Geometry factor

The cavity needs to be tunable

CAST-CAPP/IBS

First experiment using rectangular cavities in a dipole magnet

- Rectangular cavity resonant frequencies

$$f_{lmn} \sim \sqrt{\left(\frac{l}{w}\right)^2 + \left(\frac{m}{h}\right)^2 + \left(\frac{n}{L}\right)^2}$$

- Resonant E field aligned with the external B field: TE_{l0n} modes

$$E_y \sim \sin\left(\frac{l\pi}{h}x\right)\sin\left(\frac{n\pi}{L}z\right)$$

$$E_x = E_z = 0$$

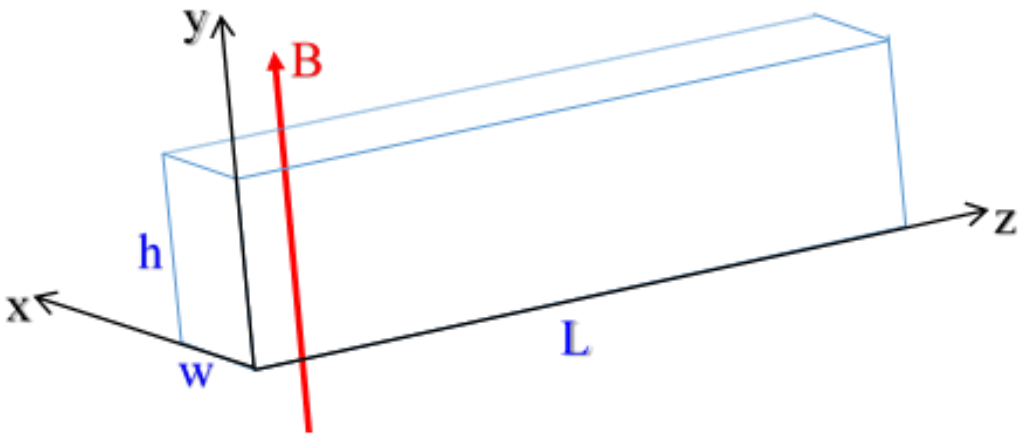

Projected sensitivity

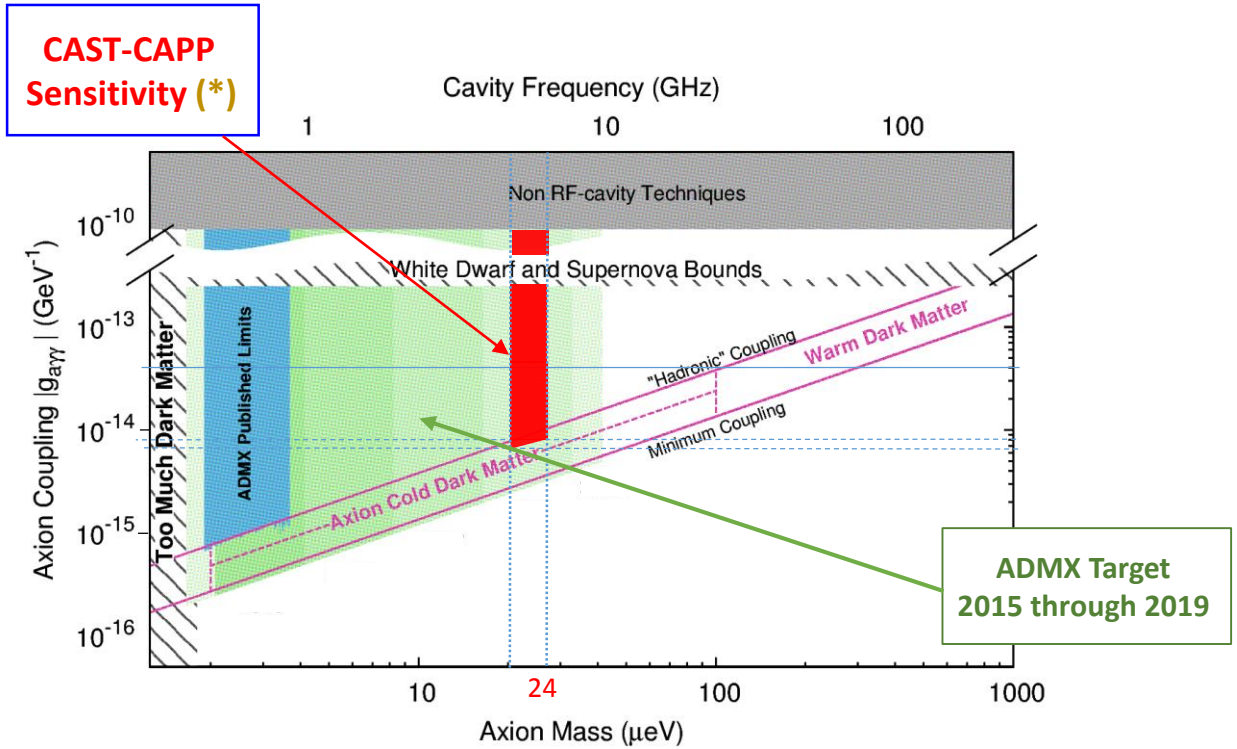

(*) ADMX-HF can run in a region similar to CAST. Sensitivity projections and time not explicitly stated.

CAST-CAPP/IBS Search: The CAST Dipole Magnet

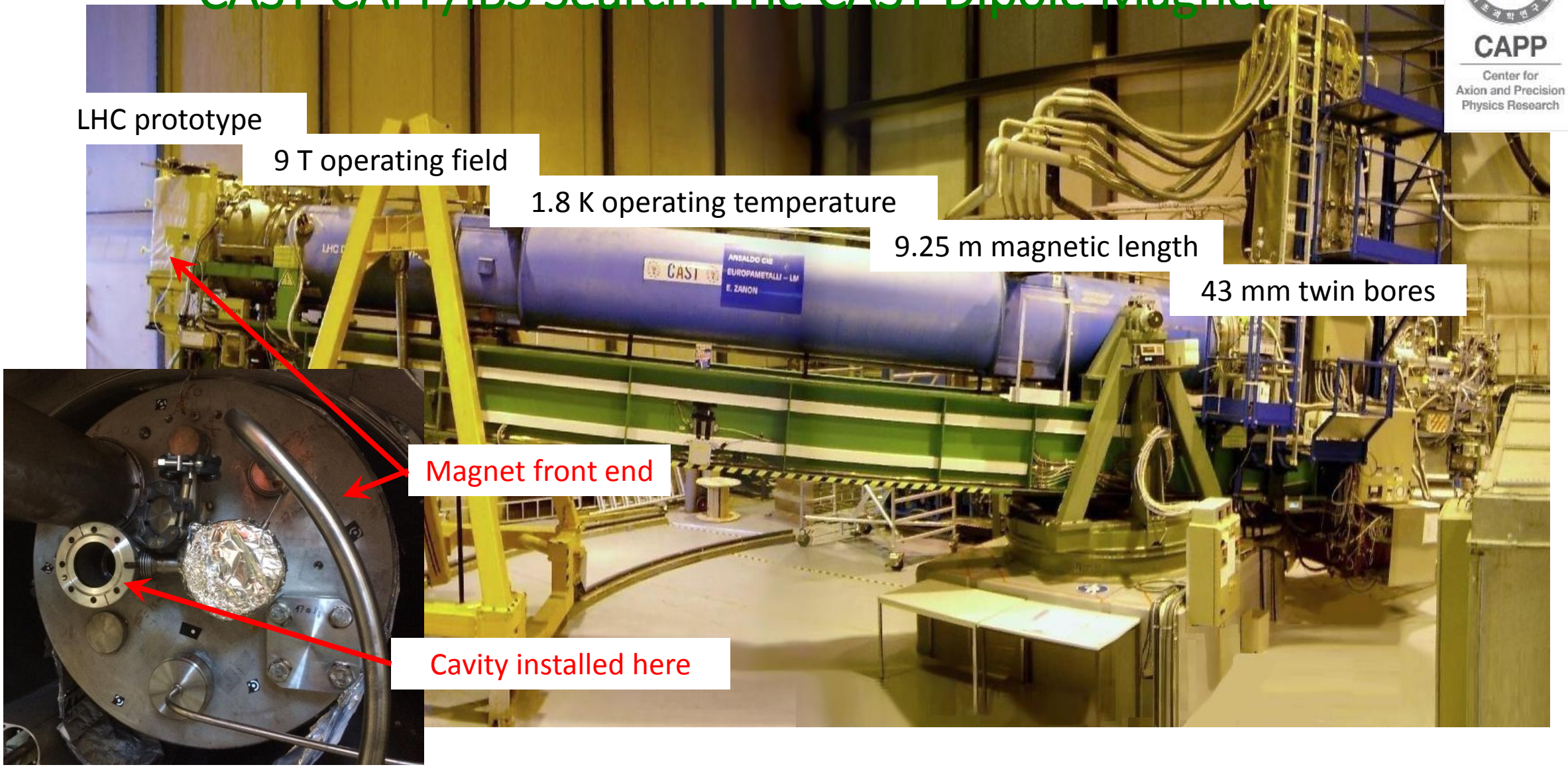

CAST-CAPP/IBS Search: The CAST Dipole Magnet

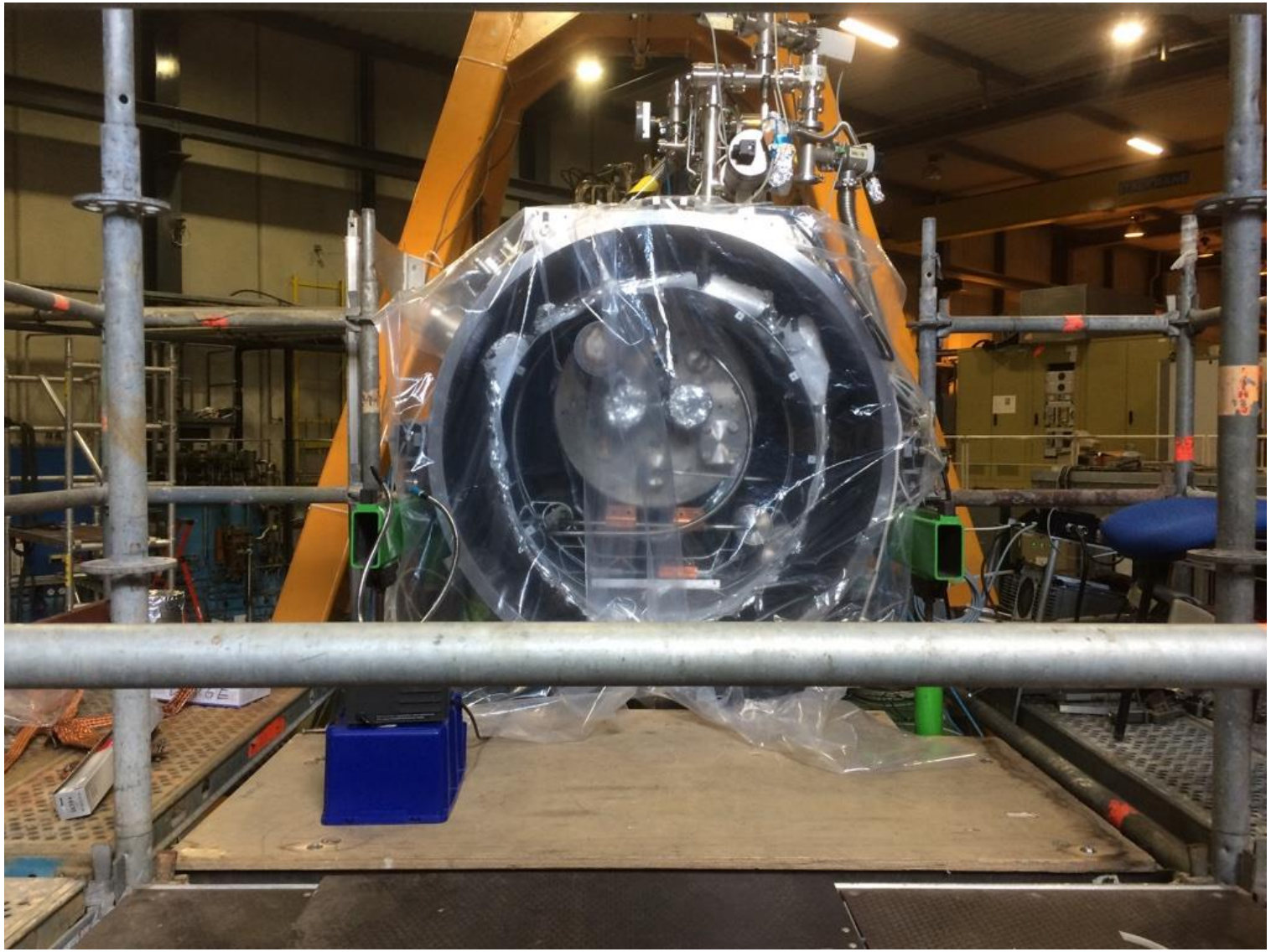

Contributors to the CAST-CAPP/IBS project

29 people, 5 institutions

CAPP/IBS

• Jihoon Choi	RF measurements, simulations
• Woohyun Chung	Cavity quality factor
• Young-Im Kim	Room temperature RF
• Miran Kim	Computer simulations
• ByeongRok Ko	RF measurements and cryogenics
• MyeongJae Lee	Data acquisition
• Soohyung Lee	Slow control
• Lino Miceli	
• SungWoo Youn	Multi-cavity phase matching
• Yannis Semertzidis (CAPP, KAIST)	CAPP Director, physics analysis
• Harry Themann	Mechanical design, hardware
• Minsang You	Undergraduate student

Contributors to the CAST-CAPP/IBS project

29 people, 5 institutions

- CAST
  - Konstantin Zioutas — CAST spokesperson
  - Martyn Davenport — Integration with the CAST magnet
  - Wolfgang Funk — CAST new technical coordinator
  - Jean-Michel Laurent — Vacuum and magnet operations
  - Antonios Gardikiotis — Stress simulations
  - Theodoros Vafeiadis — Assistance during installation

- CERN
  - Michael Betz — RF
  - Fritz Caspers — RF, cavity design, and more
  - Lucio Fiscarelli — Magnetic field measurements
  - Carlo Petrone — Magnetic field sensing
  - Walter Wuensch — Consultant

Contributors to the CAST-CAPP/IBS project

29 people, 5 institutions

- Brookhaven National Laboratory (BNL)
  - Joseph M. Brennan — RF, cavities
  - Frank Lincoln — Mechanical Engineering
- Korea Advanced Institute of Science and Technology (KAIST)
  - Hyoungsoon Choi — Low Temperatures
  - Jhinhwan Lee — Tuning optimization, Q enhancement
- Korea Research Institute of Standard and Science (KRISS)
  - Yonuk Chong — Low noise amplifiers, electronics
  - Yong-Ho Lee — Low noise amplifiers, B-field shielding

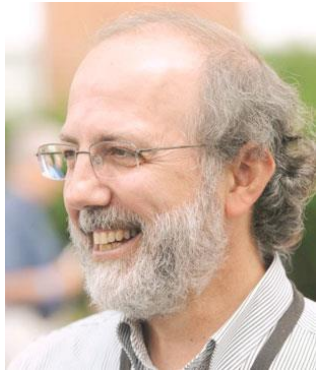

A bit of history

2014,	**Dec**	**CAPP director proposed to take responsibility for this project**
		Started some simulation exercises
2015,	**Jan**	**First report to CAST; started looking for collaborators**
	Mar	**Presented proposal to CAST; generated CDR**
	May	**A first cavity prototype built by BNL including plastic (working) tuning bars; draft proposal**
	June	**Proposal to CERN, presentation at the Patras workshop, CAST-CAPP/IBS project group formed**
	July	**Project promoted by the CERN SPSC referee**
	Sep	**Responded to SPSC referee comments**

A bit of history (continued)

2015,	**Oct**	**CERN SPSC committee review and approval**
	Nov-Dec	**First cavity design**
	Dec	**First integration meeting**
2016,	**Feb**	**Vacuum vessel design**
	Mar	**Fabrication of all-copper cavities**
	Apr	**Upgraded cavity design, design of flanges with feedthroughs**
	May 25	**Stainless steel cavity delivery**
	May 26	**Delivery of flanges with feedthroughs**
	May 30	**OK to install received**
	June 21	**Cavity installed in magnet**

Some insights in the project through images

"Cryocooler" design and procurement

Dr. Yonuk Chong

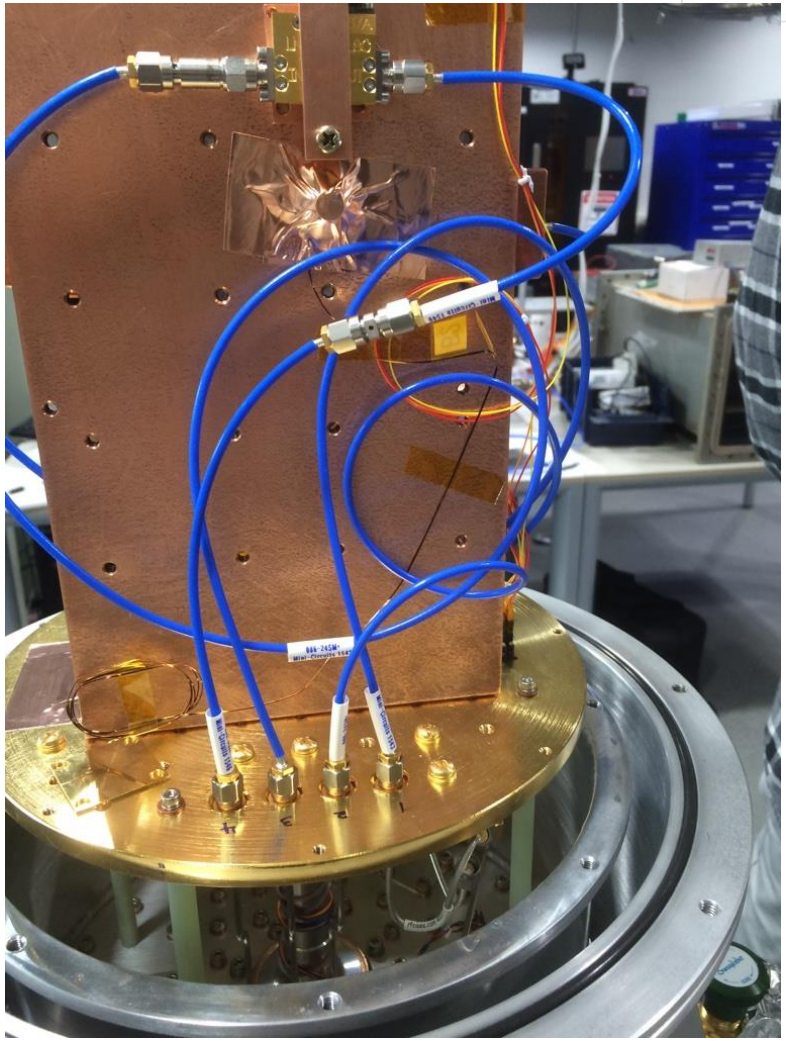

Some insights in the project through images

Prof. Hyoungsoon Choi

Early designs

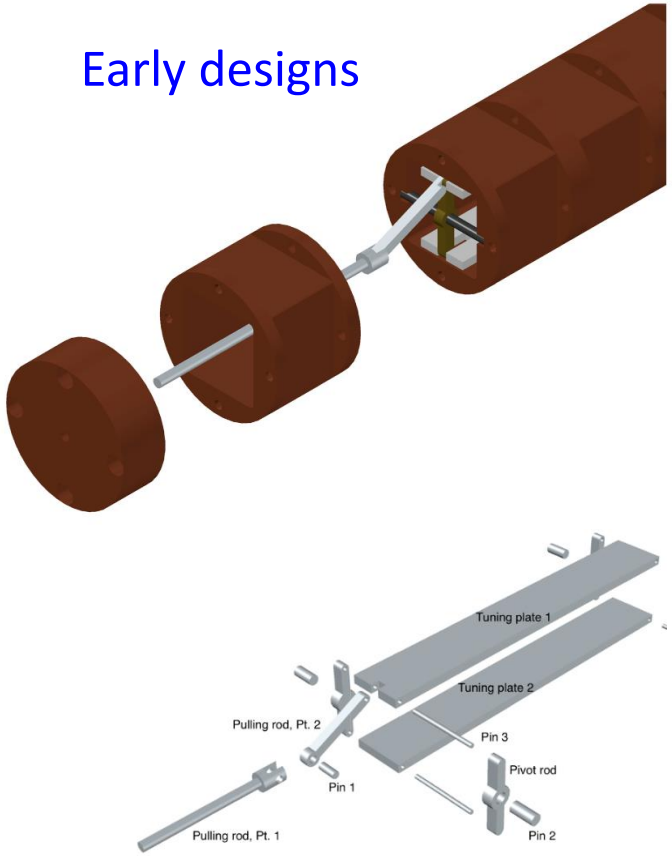

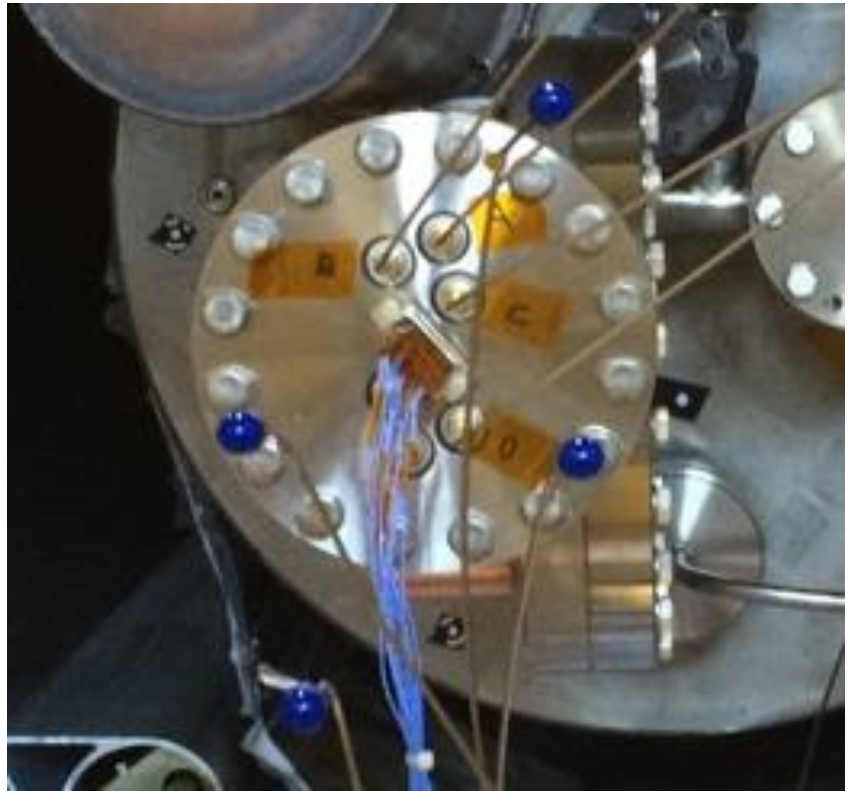

Flanges with feedthroughs fabricated and delivered in record time thanks to Prof. Choi

Some insights in the project through images

Prof. Jhinhwan Lee

Dielectric uning design
Temperature sensors

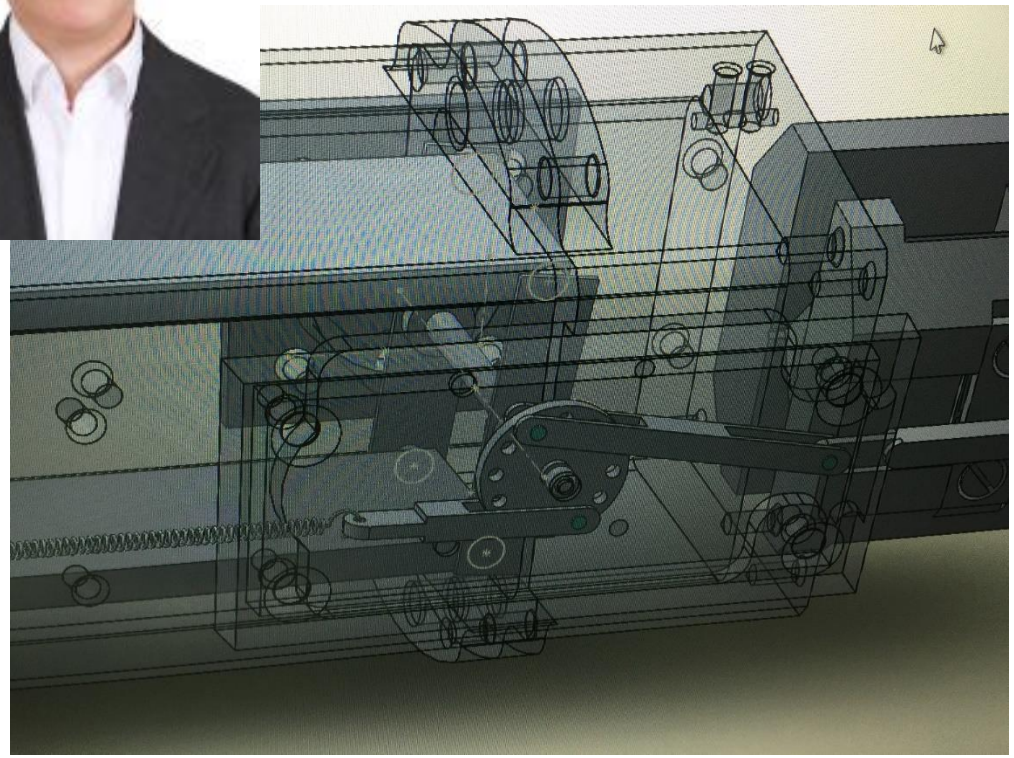

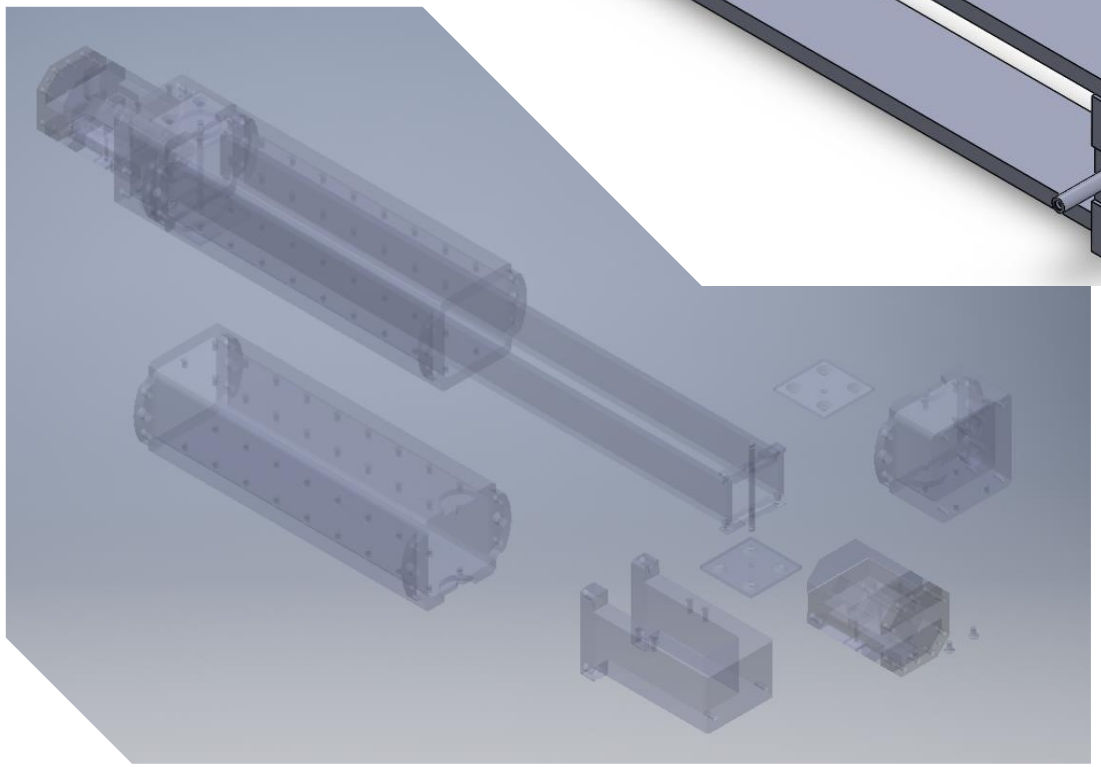

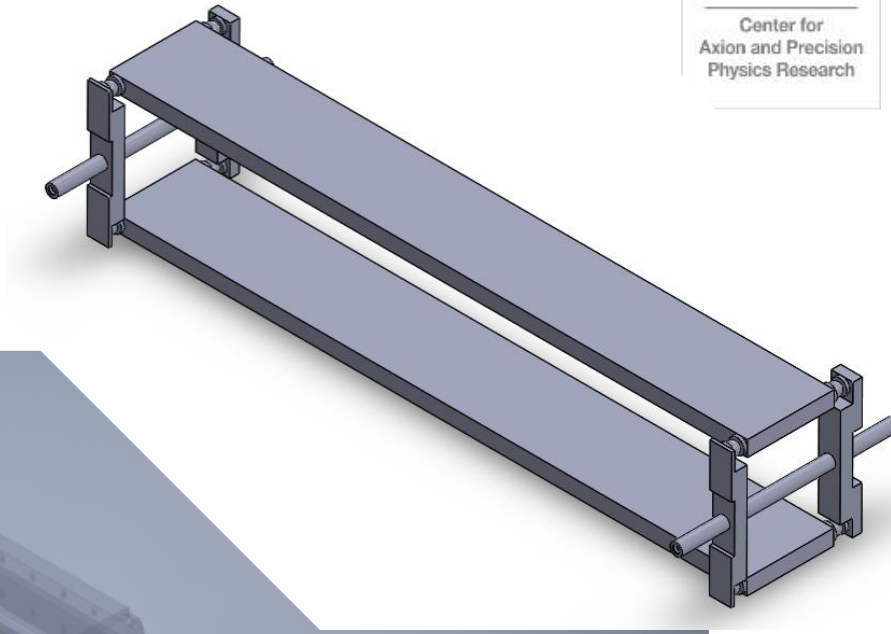

Some insights in the project through images

Dr. Young-Im Kim

Cavity procurement

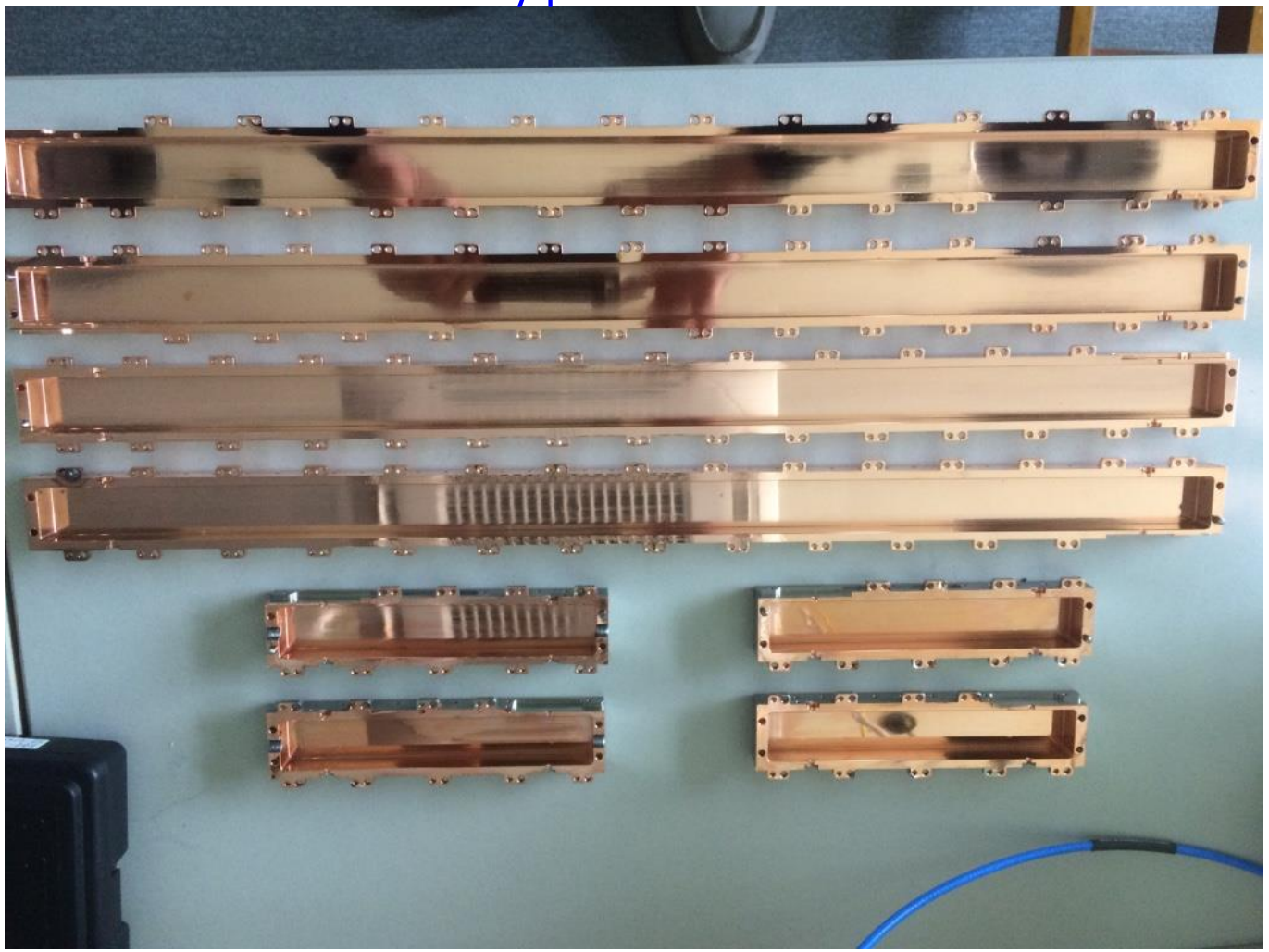

Some insights in the project through images

Dr. MyeongJae Lee:
Data acquisition, choosing the right measuring equipment

Dr. ByeongRok Ko:
so many valuable discussions, suggestions and prompt help

Dr. Soohyung Lee:
data acquisition and slow control

Dr. SungWoo Youn:
multicavity phase matching

Some insights in the project through images

Dr. Woohyun Chung:
cavity quality factor

Mi Ran Kim Simulations with COMSOL

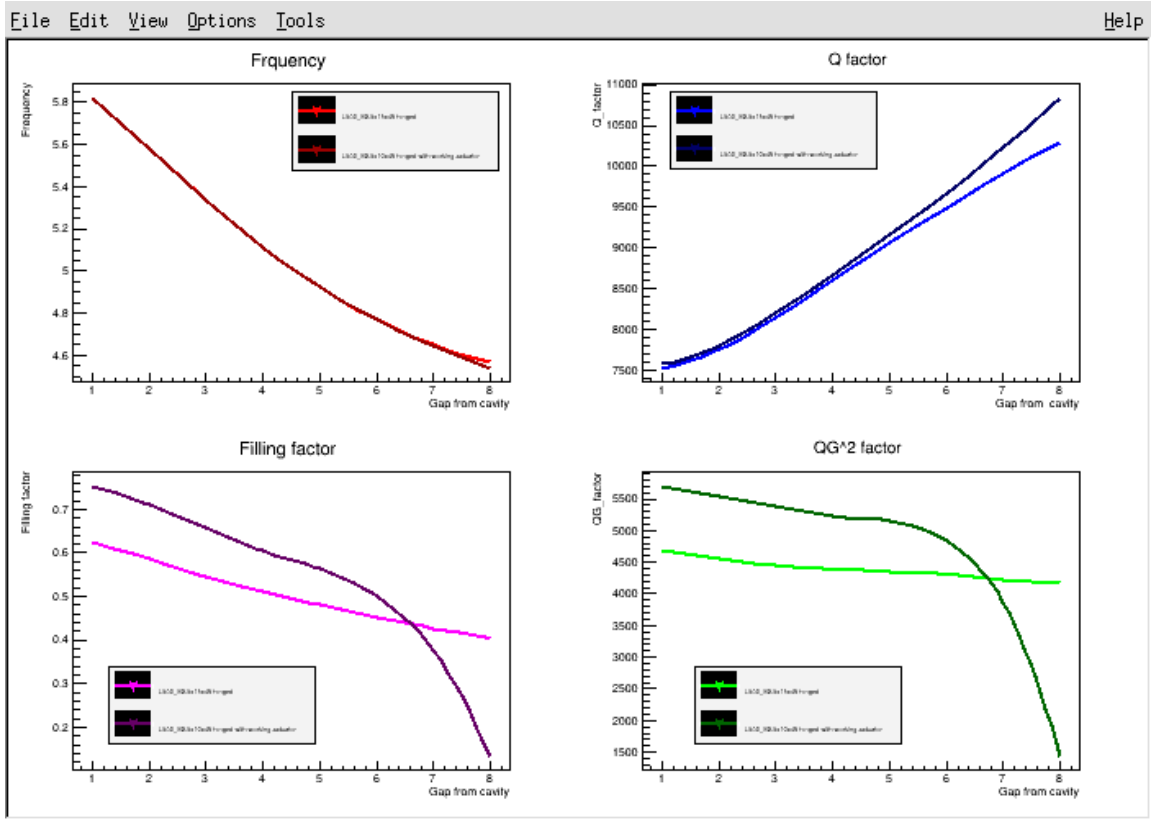

Some insights in the project through images

Dr. Harry Themann
System engineering

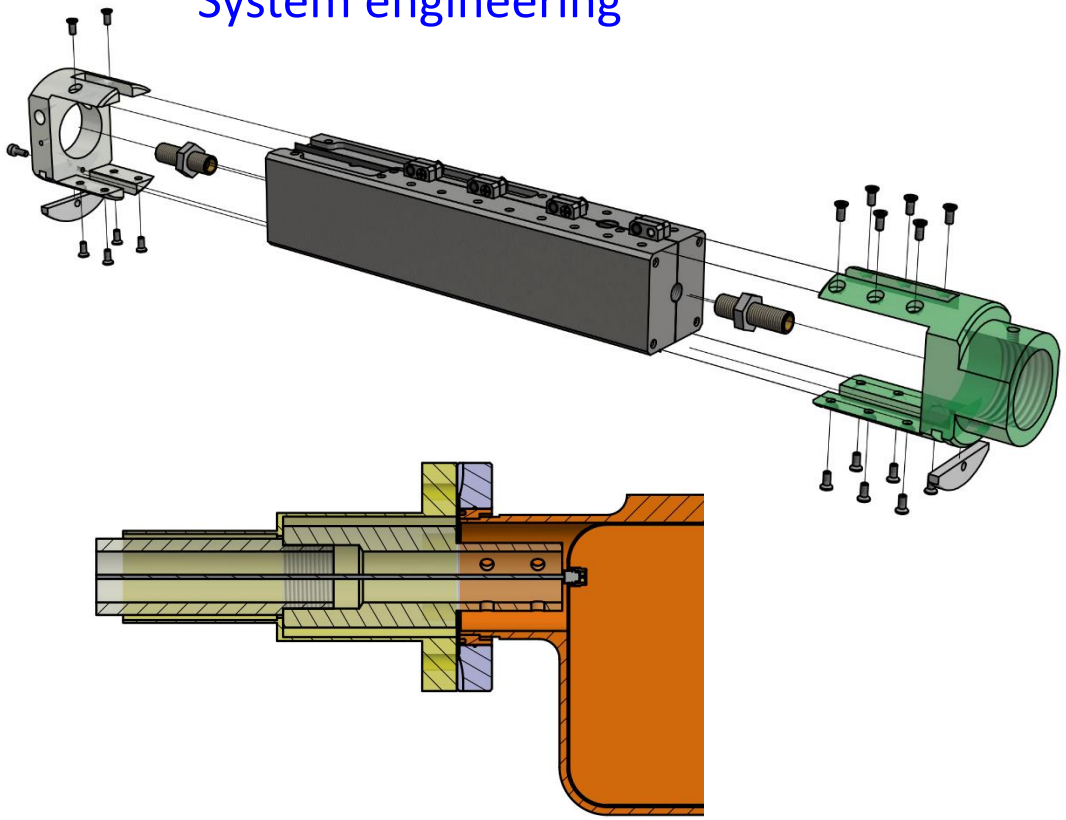

Dr. Jihoon Choi
RF measurements, coupling and cavity simulations

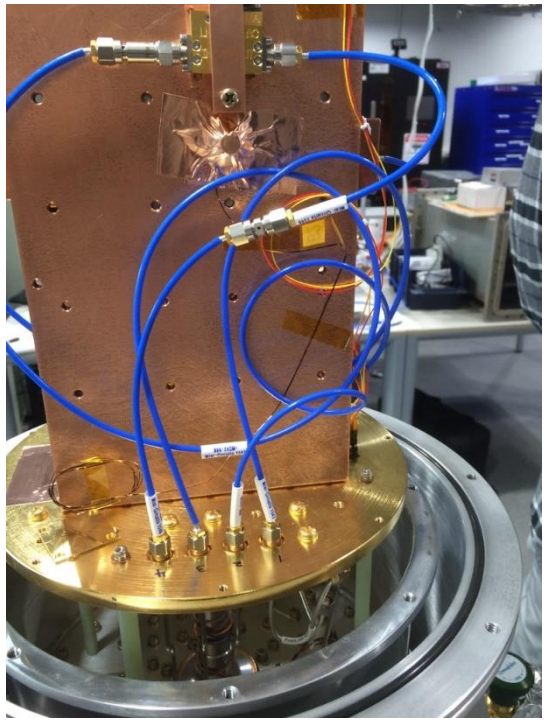

Some insights in the project through images

They did not mind a beer

Dr. Harry Themann

Some insights in the project through images

Martyn Davenport: integration

Vacuum vessel
designed and fabricated by CERN

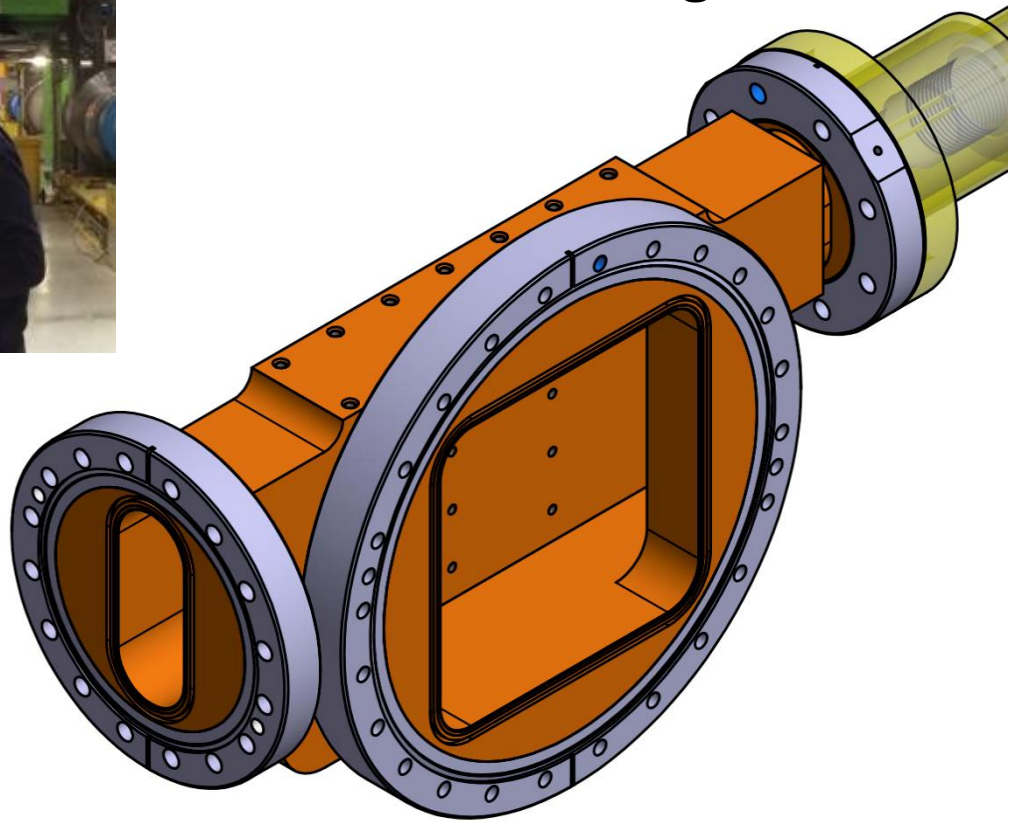

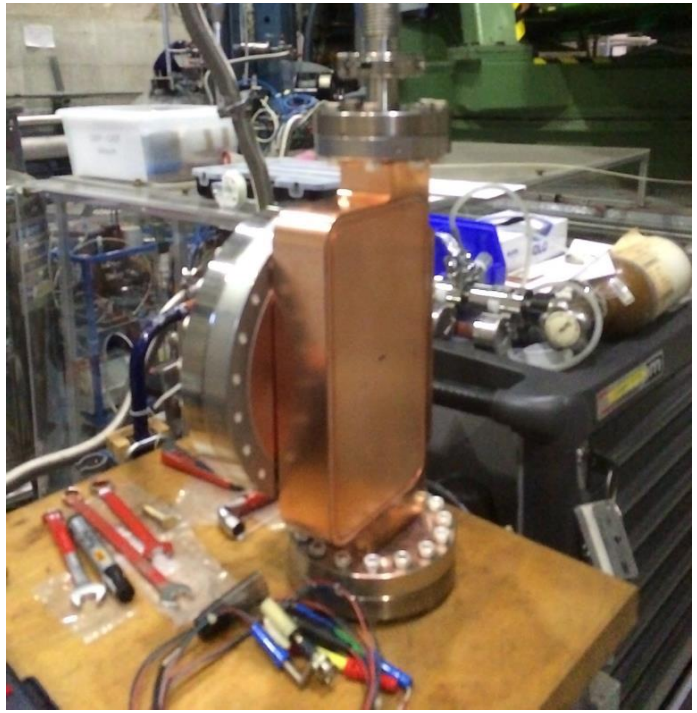

Some insights in the project through images

Frank Lincoln:
Two wees of hard work
without interruptions

Some insights in the project through images

Started much earlier: Aug 2015

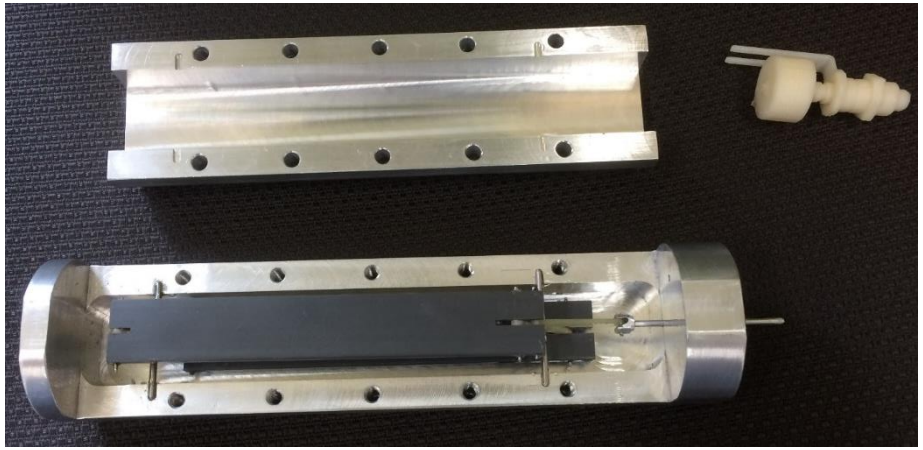

But at the end …

Some insights in the project through images

Jean-Michel Laurent

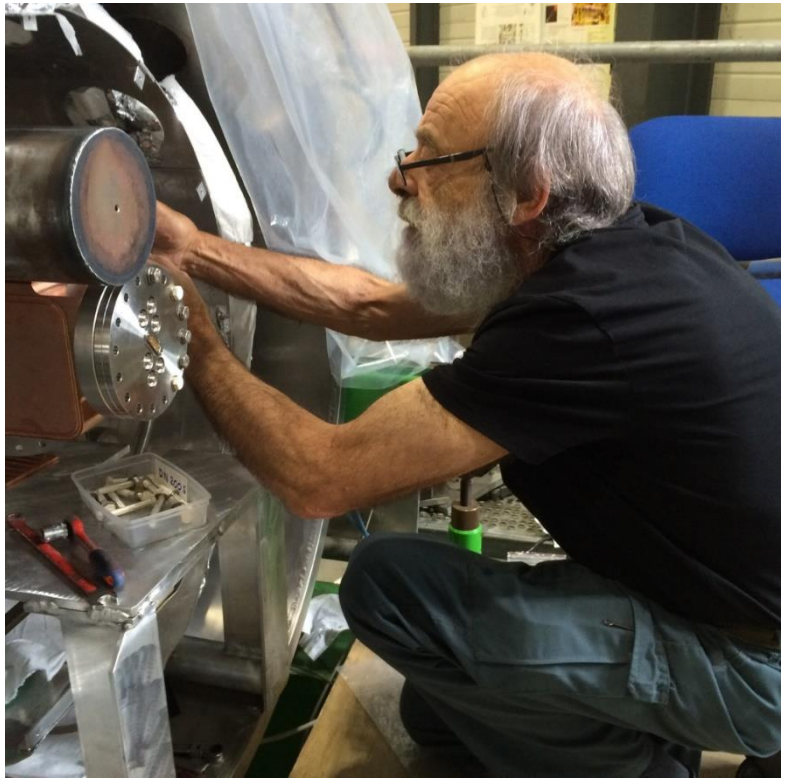

Some insights in the project through images

No words sufficient to describe Fritz Caspers' contribution. He is never tired.

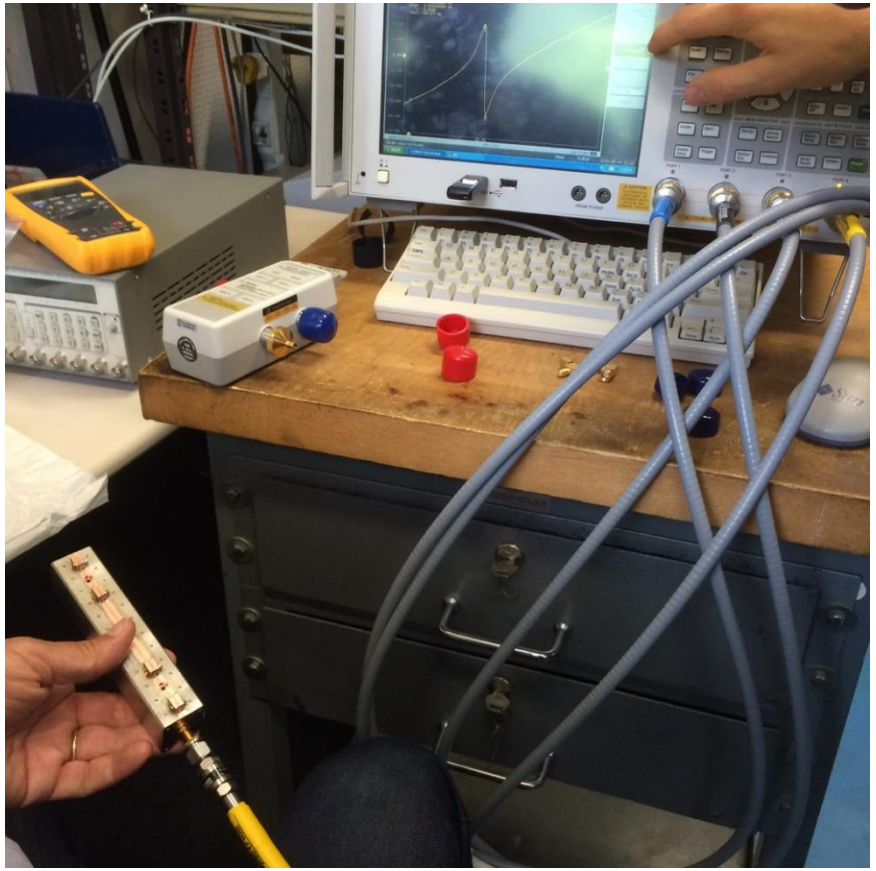

Some insights in the project through images

Mike Brennan

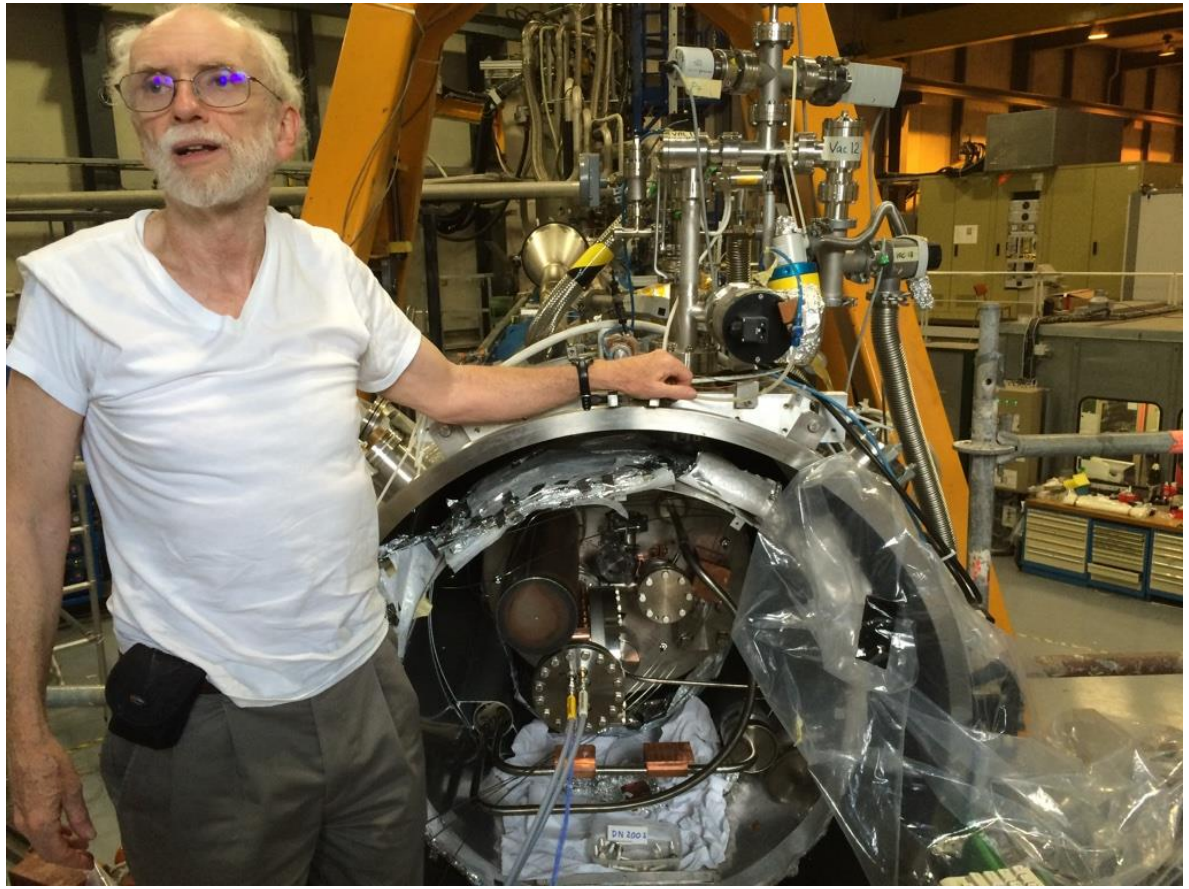

Some insights in the project through images

The cavity went in

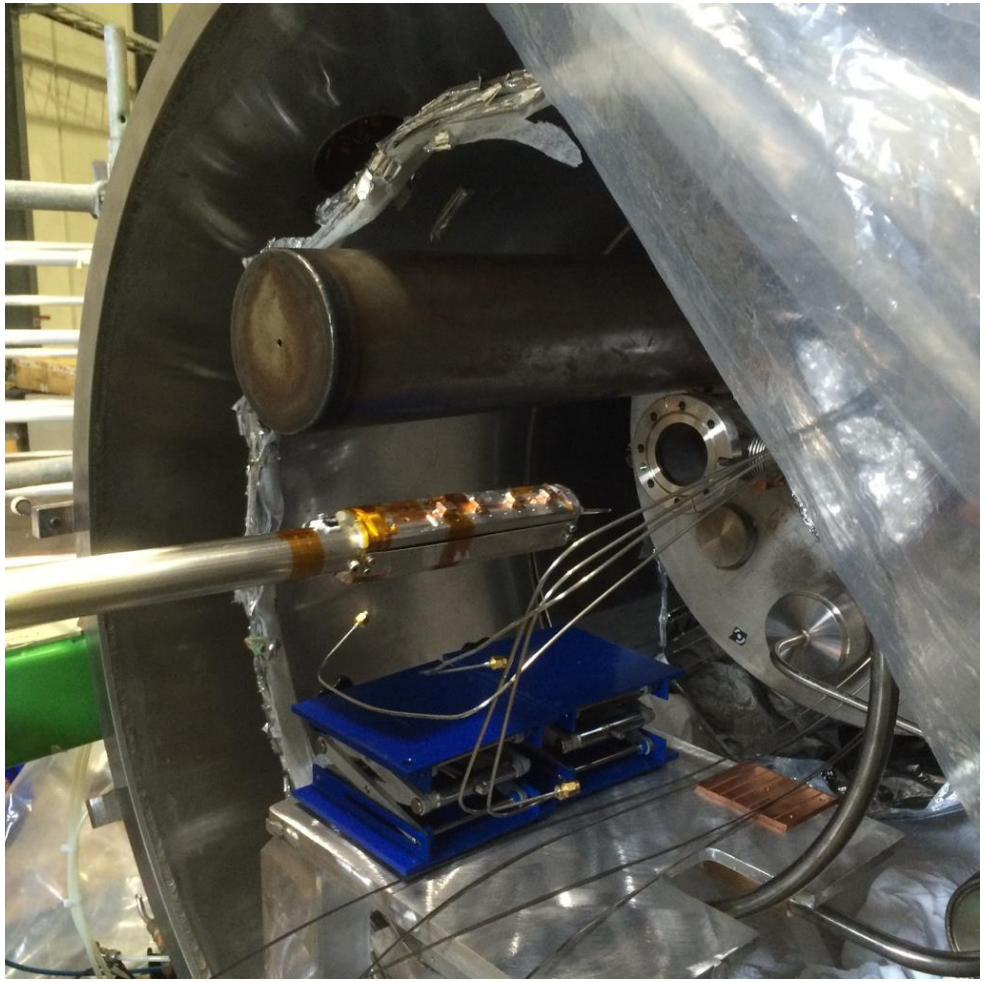
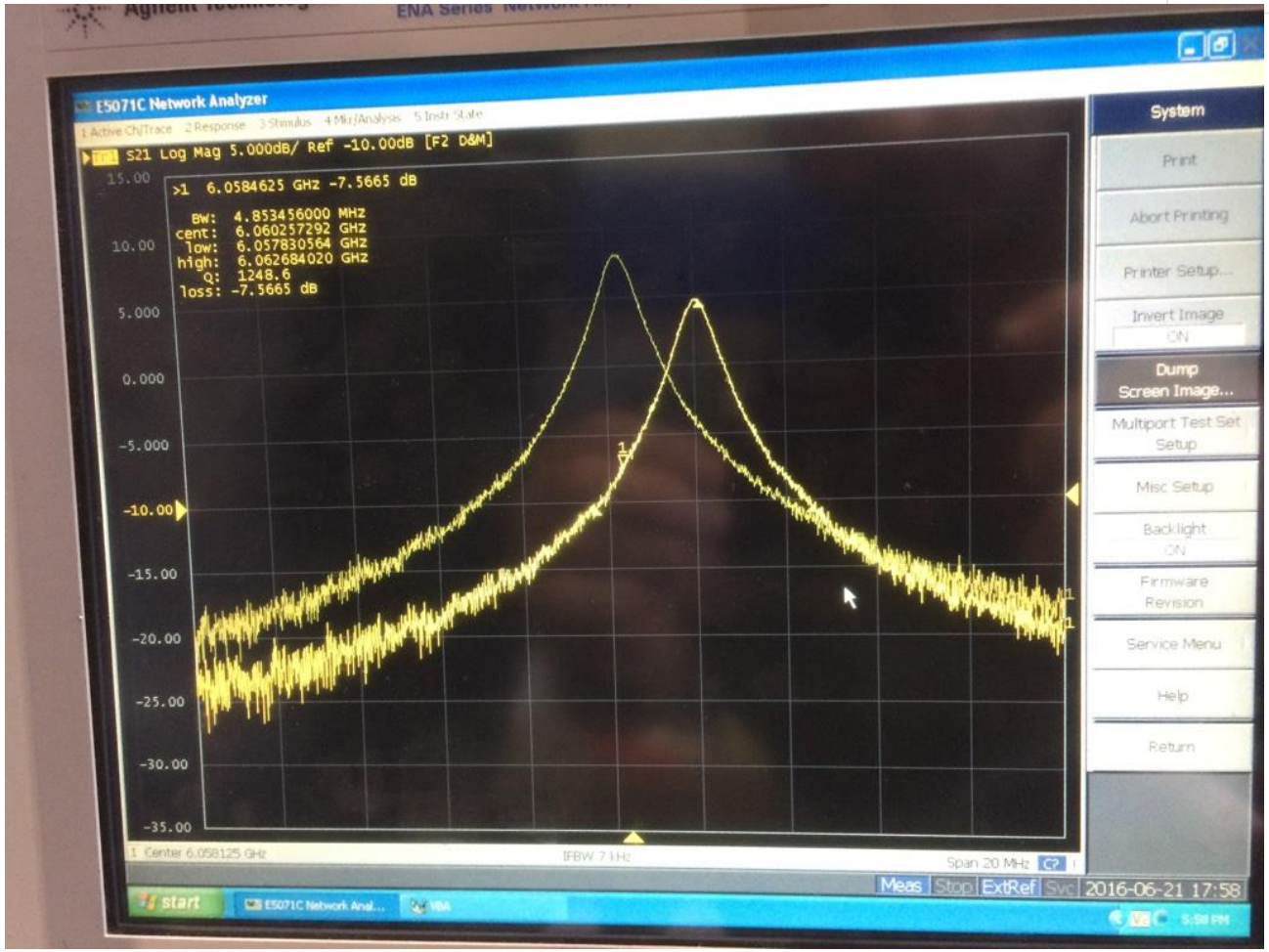
And it works, at least for now