Hopf Algebras and Renormalization

Dirk Kreimer[1]

Talk given at *QCD: the modern view of the strong interactions*
Berlin, October 04-09, 2009

October 06, 2009

[1] kreimer@ihes.fr, `http://www.ihes.fr` and `http://math.bu.edu/research/mathphys/`

Acknowledgments and Literature

- Thanks to people involved:
  Paolo Aluffi, Marc Bellon, Christoph Bergbauer, Isabella Bierenbaum, Spencer Bloch, David Broadhurst, Francis Brown, Alain Connes, Bob Delbourgo, Dzimitri Doryn, Hélène Esnault, Kurusch Ebrahimi-Fard, Loic Foissy, Herbert Gangl, John Gracey, Dominique Manchon, Matilde Marcolli, Igor Mencattini, Oliver Schnetz, Walter van Suijlekom, Matt Szczesny, Ivan Todorov, Stefan Weinzierl, Karen Yeats

Acknowledgments and Literature

- Thanks to people involved:
  Paolo Aluffi, Marc Bellon, Christoph Bergbauer, Isabella Bierenbaum, Spencer Bloch, David Broadhurst, Francis Brown, Alain Connes, Bob Delbourgo, Dzimitri Doryn, Hélène Esnault, Kurusch Ebrahimi-Fard, Loic Foissy, Herbert Gangl, John Gracey, Dominique Manchon, Matilde Marcolli, Igor Mencattini, Oliver Schnetz, Walter van Suijlekom, Matt Szczesny, Ivan Todorov, Stefan Weinzierl, Karen Yeats

- Literature:

  D. Kreimer, *Algebra for quantum fields,* arXiv:0906.1851 [hep-th], Clay Math. Inst. Proc. and references there.
  G. van Baalen, D. Kreimer, D. Uminsky and K. Yeats, *The QED beta-function from global solutions to Dyson-Schwinger equations,* Annals Phys. **324** (2009) 205 [arXiv:0805.0826 [hep-th]].
  G. van Baalen, D. Kreimer, D. Uminsky and K. Yeats, *The QCD beta-function from global solutions to Dyson-Schwinger equations,* Annals of Physics, submitted, arXiv:0906.1754 [hep-th].

Overview of talk

- Feynman graphs and their algebraic properties
  - Hopf algebras
  - Lie algebras
  - sub-Hopf algebras
  - Dynkin operators $S \star Y$

Overview of talk

- Feynman graphs and their algebraic properties
  - Hopf algebras
  - Lie algebras
  - sub-Hopf algebras
  - Dynkin operators $S \star Y$
- The structure of a Green function
  - Kinematics as cohomology
  - Leading-log expansions - the RGE from $S \star Y$
  - Reductions to γ_1
  - ODEs for β-functions

Overview of talk

- Feynman graphs and their algebraic properties
  - Hopf algebras
  - Lie algebras
  - sub-Hopf algebras
  - Dynkin operators $S \star Y$
- The structure of a Green function
  - Kinematics as cohomology
  - Leading-log expansions - the RGE from $S \star Y$
  - Reductions to γ_1
  - ODEs for β-functions
- Hodge structures and Feynman graphs
  - renormalization as a limiting mixed Hodge structure
  - periods in QFT
  - digression: AdS/CFT

Overview of talk

- Feynman graphs and their algebraic properties
  - Hopf algebras
  - Lie algebras
  - sub-Hopf algebras
  - Dynkin operators $S \star Y$
- The structure of a Green function
  - Kinematics as cohomology
  - Leading-log expansions - the RGE from $S \star Y$
  - Reductions to γ_1
  - ODEs for β-functions
- Hodge structures and Feynman graphs
  - renormalization as a limiting mixed Hodge structure
  - periods in QFT
  - digression: AdS/CFT
- Nonperturbative aspects of QED and QCD
  - QED
  - QCD

Hopf algebra of graphs $H = \mathbb{Q}1 \oplus \bigoplus_{j=1}^{\infty} H^j$

- The coproduct

$$\Delta(\Gamma) = \Gamma \otimes 1 + 1 \otimes \Gamma + \overbrace{\sum_{\gamma = \cup_i \gamma_i, \omega_4(\gamma_i) \geq 0} \gamma \otimes \Gamma/\gamma}^{\Delta'(\Gamma)} \tag{1}$$

Hopf algebra of graphs $H = \mathbb{Q}1 \oplus \bigoplus_{j=1}^{\infty} H^j$

- The coproduct

$$\Delta(\Gamma) = \Gamma \otimes 1 + 1 \otimes \Gamma + \overbrace{\sum_{\gamma = \cup_i \gamma_i, \omega_4(\gamma_i) \geq 0} \gamma \otimes \Gamma/\gamma}^{\Delta'(\Gamma)} \tag{1}$$

- The antipode

$$S(\Gamma) = -\Gamma - \sum S(\gamma)\Gamma/\gamma = -m(S \otimes \mathrm{P})\Delta \tag{2}$$

Hopf algebra of graphs $H = \mathbb{Q}1 \oplus \bigoplus_{j=1}^{\infty} H^j$

- The coproduct

$$\Delta(\Gamma) = \Gamma \otimes 1 + 1 \otimes \Gamma + \overbrace{\sum_{\gamma = \cup_i \gamma_i, \omega_4(\gamma_i) \geq 0} \gamma \otimes \Gamma/\gamma}^{\Delta'(\Gamma)} \tag{1}$$

- The antipode

$$S(\Gamma) = -\Gamma - \sum S(\gamma)\Gamma/\gamma = -m(S \otimes \mathrm{P})\Delta \tag{2}$$

- The character group

$$G_V^H \ni \Phi \Leftrightarrow \Phi : H \to V, \Phi(h_1 \cup h_2) = \Phi(h_1)\Phi(h_2) \tag{3}$$

Hopf algebra of graphs $H = \mathbb{Q}1 \oplus \bigoplus_{j=1}^{\infty} H^j$

- The coproduct

$$\Delta(\Gamma) = \Gamma \otimes 1 + 1 \otimes \Gamma + \overbrace{\sum_{\gamma = \cup_i \gamma_i, \omega_4(\gamma_i) \geq 0} \gamma \otimes \Gamma/\gamma}^{\Delta'(\Gamma)} \tag{1}$$

- The antipode

$$S(\Gamma) = -\Gamma - \sum S(\gamma)\Gamma/\gamma = -m(S \otimes \mathrm{P})\Delta \tag{2}$$

- The character group

$$G_V^H \ni \Phi \Leftrightarrow \Phi : H \to V, \Phi(h_1 \cup h_2) = \Phi(h_1)\Phi(h_2) \tag{3}$$

- The counterterm

$$\begin{aligned} S_R^{\Phi}(\Gamma) &= -R\left(\Phi(h) - \sum S_R^{\Phi}(\gamma)\Phi(\Gamma/\gamma)\right) \\ &= -R\,\Phi\left(m(S_R^{\Phi} \otimes \Phi\ P)\Delta(\Gamma)\right) \end{aligned} \tag{4}$$

Hopf algebra of graphs $H = \mathbb{Q}1 \oplus \bigoplus_{j=1}^{\infty} H^j$

- The coproduct

$$\Delta(\Gamma) = \Gamma \otimes 1 + 1 \otimes \Gamma + \overbrace{\sum_{\gamma = \cup_i \gamma_i, \omega_4(\gamma_i) \geq 0} \gamma \otimes \Gamma/\gamma}^{\Delta'(\Gamma)} \tag{1}$$

- The antipode

$$S(\Gamma) = -\Gamma - \sum S(\gamma)\Gamma/\gamma = -m(S \otimes \mathrm{P})\Delta \tag{2}$$

- The character group

$$G_V^H \ni \Phi \Leftrightarrow \Phi : H \to V, \Phi(h_1 \cup h_2) = \Phi(h_1)\Phi(h_2) \tag{3}$$

- The counterterm

$$\begin{aligned} S_R^{\Phi}(\Gamma) &= -R\left(\Phi(h) - \sum S_R^{\Phi}(\gamma)\Phi(\Gamma/\gamma)\right) \\ &= -R\ \Phi\left(m(S_R^{\Phi} \otimes \Phi\ P)\Delta(\Gamma)\right) \end{aligned} \tag{4}$$

- The renormalized Feynman rules

$$\Phi_R = m(S_R^{\Phi} \otimes \Phi)\Delta \tag{5}$$

An Example

- The co-product

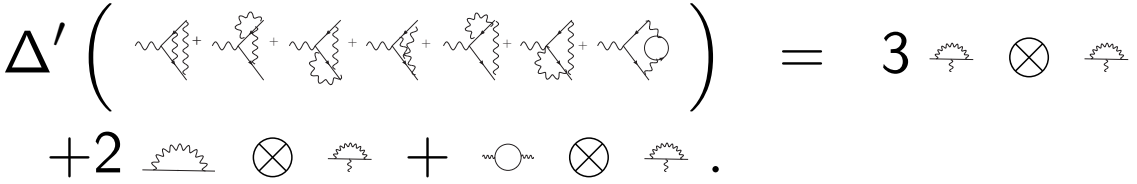

An Example

- The co-product

$\Delta'\Big($ 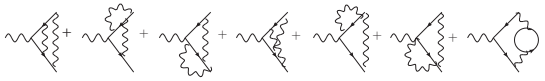 $\Big) \;=\; 3$  $+2$ 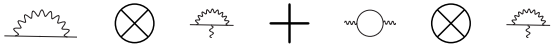 $+$ $.$

- The counterterm

$S_R^{\Phi}($  $) = -Rm\left[S_R^{\Phi}\otimes\Phi P\right]\times$

$\times\Delta\Big($ 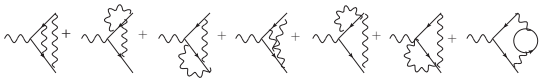 $\Big)$

$= -R\Big\{\Phi\Big($  $\Big) +$

$+R\left[\Phi\left(3\right.$  $+2$  $+$  $\left.\right)\right]\Phi\left(\right.$  $\left.\right)\Big\}$

An Example

- The co-product

$\Delta'\Big($ 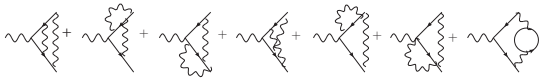 $\Big) \;=\; 3$  $+2$ 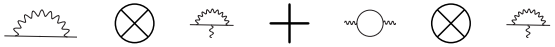 $+$ $.$

- The counterterm

$S_R^{\Phi}($  $) = -Rm\left[S_R^{\Phi}\otimes\Phi P\right]\times$

$\times\Delta\Big($  $\Big)$

$= -R\Big\{\Phi\Big($  $\Big) +$

$+R\left[\Phi\left(3\right.\right.$  $+2$  $+$  $\left.\left.\right)\right]\Phi\left(\right.$  $\left.\right)\Big\}$

- The renormalized result

$\Phi_R = (\mathrm{id}-R)m(S_R^{\Phi}\otimes\Phi P)\Delta\Big($  $\Big)$

$= (\mathrm{id}-R)\Big\{\Phi\Big($  $\Big)$

$+R\left[\Phi\left(3\right.\right.$  $+2$  $+$  $\left.\left.\right)\right]\Phi\left(\right.$ $\left.\right)\Big\}$

Lie algebra of graphs

- The Milnor Moore Theorem
  $H = U^{\star}(L)$

Lie algebra of graphs

- The Milnor Moore Theorem
  $H = U^\star(L)$
- The pairing

$$\langle Z_\Gamma, \delta_{\Gamma'} \rangle = \delta_{\Gamma,\Gamma'}^{\mathrm{Kronecker}} \tag{6}$$

Lie algebra of graphs

- The Milnor Moore Theorem
  $H = U^{\star}(L)$
- The pairing

$$\langle Z_\Gamma, \delta_{\Gamma'} \rangle = \delta^{\text{Kronecker}}_{\Gamma,\Gamma'} \tag{6}$$

- the Lie algebra

$$[Z_\Gamma, Z_{\Gamma'}] = Z_{\Gamma' \star \Gamma - \Gamma \star \Gamma'} \tag{7}$$

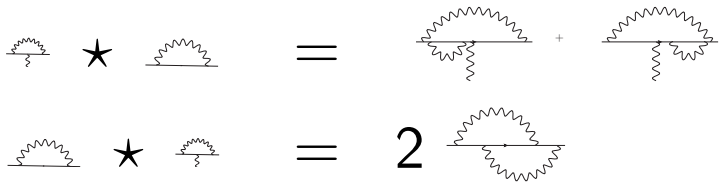

Lie algebra of graphs

- The Milnor Moore Theorem
  $H = U^\star(L)$
- The pairing

$$\langle Z_\Gamma, \delta_{\Gamma'} \rangle = \delta^{\text{Kronecker}}_{\Gamma,\Gamma'} \tag{6}$$

- the Lie algebra

$$[Z_\Gamma, Z_{\Gamma'}] = Z_{\Gamma' \star \Gamma - \Gamma \star \Gamma'} \tag{7}$$

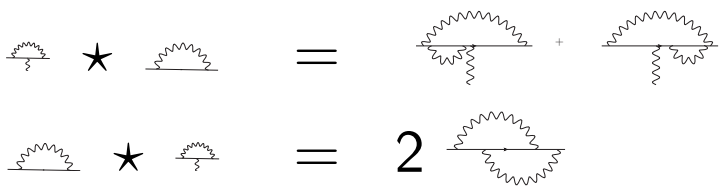

- Leads to an identification of β-functions and anomalous dimenions, and lifts the Birkhoff decomposition $\Phi_R = S^\Phi_R \star \Phi$ to diffeomorphisms of physical parameters.

sub-Hopf algebras

- summing order by order

$$c_k^r = \sum_{|\Gamma|=k,\mathrm{res}(\Gamma)=r} \frac{1}{|Aut(\Gamma)|}\Gamma, \tag{8}$$

then

$$\Delta(c_k^r) = \sum_j \mathrm{Pol}_j(c_m^s) \otimes c_{k-j}^r. \tag{9}$$

sub-Hopf algebras

- summing order by order

$$c_k^r = \sum_{|\Gamma|=k,\mathrm{res}(\Gamma)=r} \frac{1}{|Aut(\Gamma)|}\Gamma, \tag{8}$$

then

$$\Delta(c_k^r) = \sum_j \mathrm{Pol}_j(c_m^s) \otimes c_{k-j}^r. \tag{9}$$

- Hochschild closedness

$$X^r = 1 \pm \sum_j c_j^r \alpha^j = 1 \pm \sum_j \alpha^j B_+^{r;j}(X^r Q^j(\alpha)), \tag{10}$$

$Q^j = \frac{X^v}{\sqrt{\prod_{\text{edges e at v}} X^e}}$. Evaluates to invariant charge.

sub-Hopf algebras

- summing order by order

$$c_k^r = \sum_{|\Gamma|=k,\mathrm{res}(\Gamma)=r} \frac{1}{|Aut(\Gamma)|}\Gamma, \tag{8}$$

then

$$\Delta(c_k^r) = \sum_j \mathrm{Pol}_j(c_m^s) \otimes c_{k-j}^r. \tag{9}$$

- Hochschild closedness

$$X^r = 1 \pm \sum_j c_j^r \alpha^j = 1 \pm \sum_j \alpha^j B_+^{r;j}(X^r Q^j(\alpha)), \tag{10}$$

$Q^j = \frac{X^v}{\sqrt{\prod_{\text{edges e at v}} X^e}}$. Evaluates to invariant charge.

- $bB_+^{r;j} = 0$.

$$\Delta B_+^{r;j}(X) = B_+^{r;j}(X) \otimes 1 + (id \otimes B_+^{r;j})\Delta(X). \tag{11}$$

Implies locality of counterterms upon application of Feynman rules.

Symmetry

- Ward and Slavnov–Taylor ids

$$i_k := c_k^{\bar{\psi}\psi} + c_k^{\bar{\psi}\not{A}\psi} \tag{12}$$

span Hopf (co-)ideal I:

$$\Delta(I) \subseteq H \otimes I + I \otimes H. \tag{13}$$

$$\Delta(i_2) = i_2 \otimes 1 + 1 \otimes i_2 + (c_1^{\frac{1}{4}F^2} + c_1^{\bar{\psi}\not{A}\psi} + i_1) \otimes i_1 + i_1 \otimes c_1^{\bar{\psi}\not{A}\psi}.$$

Symmetry

- Ward and Slavnov–Taylor ids

$$i_k := c_k^{\bar{\psi}\psi} + c_k^{\bar{\psi}\not{A}\psi} \tag{12}$$

span Hopf (co-)ideal I:

$$\Delta(I) \subseteq H \otimes I + I \otimes H. \tag{13}$$

$$\Delta(i_2) = i_2 \otimes 1 + 1 \otimes i_2 + (c_1^{\frac{1}{4}F^2} + c_1^{\bar{\psi}\not{A}\psi} + i_1) \otimes i_1 + i_1 \otimes c_1^{\bar{\psi}\not{A}\psi}.$$

- Feynman rules vanish on $I \Leftrightarrow$ Feynman rules respect quantized symmetry:
  $\Phi^R : H/I \to V$.

Symmetry

- Ward and Slavnov–Taylor ids

$$i_k := c_k^{\bar\psi\psi} + c_k^{\bar\psi \not{A}\psi} \tag{12}$$

span Hopf (co-)ideal I:

$$\Delta(I) \subseteq H \otimes I + I \otimes H. \tag{13}$$

$$\Delta(i_2) = i_2 \otimes 1 + 1 \otimes i_2 + (c_1^{\frac{1}{4}F^2} + c_1^{\bar\psi \not{A}\psi} + i_1) \otimes i_1 + i_1 \otimes c_1^{\bar\psi \not{A}\psi}.$$

- Feynman rules vanish on $I \Leftrightarrow$ Feynman rules respect quantized symmetry:
  $\Phi^R : H/I \to V$.
- Ideals for Slavnov–Taylor ids generated by equality of renormalized charges, also for the master equation in Batalin-Vilkovisky (see Walter van Suijlekom's work)

Dynkin operators

- $S \star Y$
  $Y(\Gamma) = |\Gamma|\Gamma$ the grading operator

$$S \star Y(\Gamma) = m(S \otimes Y)\Delta(\Gamma). \tag{14}$$

  Vanishes on products.

Dynkin operators

- $S \star Y$
  $Y(\Gamma) = |\Gamma|\Gamma$ the grading operator

$$S \star Y(\Gamma) = m(S \otimes Y)\Delta(\Gamma). \tag{14}$$

  Vanishes on products.

- The leading log expansion

$$\Phi^R(\Gamma) = \sum_{j}^{corad(\Gamma)} c_j(\Gamma) \ln^j s \tag{15}$$

$$\Rightarrow c_j = \frac{1}{j!} \underbrace{\sigma \otimes \cdots \otimes \sigma}_{j \text{ times}} \Delta^{j-1}, j \geq 1 \tag{16}$$

  where $\sigma = \Phi^R \circ S \star Y \leftrightarrow \gamma_k \equiv \gamma_k(\gamma_1)$.

Kinematics and Cohomology

- Exact co-cycles

$$[B_+^{r,j}] = B_+^{r;j} + b\phi^{r;j} \tag{17}$$

with $\phi^{r;j} : H \to \mathbb{C}$

Kinematics and Cohomology

- Exact co-cycles
$$[B_+^{r;j}] = B_+^{r;j} + b\phi^{r;j} \tag{17}$$
with $\phi^{r;j} : H \to \mathbb{C}$
- Variation of momenta
$$G^R(\{g\}, \ln s, \{\Theta\}) = 1 \pm \Phi^R_{\ln s, \{\Theta\}}(X^r(\{g\})) \tag{18}$$
with $X^r = 1 \pm \sum_j g^j B_+^{r;j}(X^r Q^j(g))$, $bB_+^{r;j} = 0$. Also,
$$G^r = \left[\sum_{j=1}^{\infty} \gamma_j(\{g\}, \{\Theta\}) \ln^j s\right] + \overbrace{G_0^r}^{\textit{abelian factor}} \tag{19}$$
Then, for MOM and similar schemes (not MS!):
$\{\Theta\} \to \{\Theta'\} \Leftrightarrow B_+^{r;j} \to B_+^{r,j} + b\phi^{r,j}$.

Leading log expansions and the RGE

- The invariant charge Q^v
  For each vertex v, a charge Q^v:

$$Q^v(g) = \frac{X^v(g)}{\prod_e \sqrt{X^e}}, \tag{20}$$

  e adjacent to v.

Leading log expansions and the RGE

- The invariant charge Q^v
  For each vertex v, a charge Q^v:

$$Q^v(g) = \frac{X^v(g)}{\prod_e \sqrt{X^e}}, \tag{20}$$

  e adjacent to v.

- $$\left(\partial_L + \beta(g)\partial_g - \sum_{e \text{ adj } r} \gamma_1^e\right) G^r(g, L) = 0 \tag{21}$$

  rewrites in terms of the Dynkin operator
  $(\gamma_1^r(g) = S \star Y(X^r(g)))$:

$$\gamma_k^r(g) = \frac{1}{k}\left(\gamma_1^r(g) - \sum_{j \in R} s_j \gamma_1^j g \partial_g\right) \gamma_{k-1}^r(g) \tag{22}$$

Ordinary differential equations vs DSE

- RGE+DSE
  the iterated integral structure

$$\Phi^R(B_+^{r;j}(X)) = \int \Phi^R(X) d\mu_{r;j} \tag{23}$$

allows to combine $X^r = 1 \pm \sum_j B_+(X^r Q^j)$ with RGE to

$$\gamma_1^r = P(g) - [\gamma_1^r(g)]^2 + \sum_{j \in R} s_j \gamma_1^j g \partial_g \gamma_1^r(g). \tag{24}$$

Ordinary differential equations vs DSE

- RGE+DSE
  the iterated integral structure

$$\Phi^R(B_+^{r;j}(X)) = \int \Phi^R(X) d\mu_{r;j} \tag{23}$$

  allows to combine $X^r = 1 \pm \sum_j B_+(X^r Q^j)$ with RGE to

$$\gamma_1^r = P(g) - [\gamma_1^r(g)]^2 + \sum_{j \in R} s_j \gamma_1^j g \partial_g \gamma_1^r(g). \tag{24}$$

- massless gauge theories
  $\beta(g) = g\gamma_1(g)/2$ for γ_1 anomalous dim of gauge propagator

$$\gamma_1(g) = \overbrace{P(g)}^{\text{existence assumed}} - \gamma_1(g)(1 - g\partial_g)\gamma_1(g) \tag{25}$$

  (Ward Id QED, background field gauge (Abbott) QCD)

Limiting mixed Hodge structures

- Hopf algebra from flags

$$f := \gamma_1 \subset \gamma_2 \subset \ldots \subset \Gamma,\ \Delta'(\gamma_{i+1}/\gamma_i) = 0 \tag{26}$$

The set of all such flags $F_\Gamma \ni f$ determines Hopf algebra structure, $|F_\Gamma|$ is the length of the flag.

Limiting mixed Hodge structures

- Hopf algebra from flags

$$f := \gamma_1 \subset \gamma_2 \subset \ldots \subset \Gamma,\ \Delta'(\gamma_{i+1}/\gamma_i) = 0 \qquad (26)$$

  The set of all such flags $F_\Gamma \ni f$ determines Hopf algebra structure, $|F_\Gamma|$ is the length of the flag.
- It also determines a column vector $v = v(F_\Gamma)$ and a nilpotent matrix $(N) = (N(|F_\Gamma|))$, $(N)^{k+1} = 0$, $k = corad(\Gamma)$ such that

$$\lim_{t \to 0} (e^{-\ln t(N)})\Phi_R(v(F_\Gamma)) = (c_1^\Gamma(\Theta) \ln s, c_2^\Gamma(\Theta), c_k^\Gamma(\Theta) \ln^k s)^T \qquad (27)$$

  where k is determined from the co-radical filtration and t is a regulator say for the lower boundary in the parametric representation.

Periods and functions

- Wanted: ρ : Graphs $\longrightarrow$ Periods

$$(\rho \otimes \rho)\Delta_{Graphs} = \Delta_{periods}\rho. \tag{28}$$

What is ρ? Which Δ_{Graphs}? Is Δ_{MZV} enough???

Periods and functions

- Wanted: ρ : Graphs $\to$ Periods

$$(\rho \otimes \rho)\Delta_{Graphs} = \Delta_{periods}\rho. \tag{28}$$

  What is ρ? Which Δ_{Graphs}? Is Δ_{MZV} enough???
- What is the role of shuffle/stuffle algebras on graphs?
  They are there for flags.
  Is there a free Lie algebra structure on graphs?

Periods and functions

- Wanted: ρ : Graphs $\longrightarrow$ Periods

$$(\rho \otimes \rho)\Delta_{Graphs} = \Delta_{periods}\rho. \tag{28}$$

  What is ρ? Which Δ_{Graphs}? Is Δ_{MZV} enough???
- What is the role of shuffle/stuffle algebras on graphs?
  They are there for flags.
  Is there a free Lie algebra structure on graphs?
- What is the number-theoretic meaning of all the graph Hopf algebras?
  Not all of this is hopeless. See Francis Brown, Oliver Schnetz,...
  In general, we need a better algebro-geometric understanding.
  See identification of zig-zag graphs by Dzmitri Doryn.
  But still no understanding of rational coefficients.

core Hopf algebra structures: unitarity, gravity, BCFW

- The core Hopf algebra

$$\Delta(\Gamma) = \Gamma \otimes 1 + 1 \otimes \Gamma + \sum_{\gamma = \cup_i \gamma_i} \gamma \otimes \Gamma/\gamma \tag{29}$$

Only primitive graphs are one-loop graphs. Appears as the endpoint in tower

$$H_0 \subset H_2 \subset H_4 \subset H_6 \subset \cdots \subset H_\infty = H_{core} \tag{30}$$

core Hopf algebra structures: unitarity, gravity, BCFW

- The core Hopf algebra

$$\Delta(\Gamma) = \Gamma \otimes 1 + 1 \otimes \Gamma + \sum_{\gamma = \cup_i \gamma_i} \gamma \otimes \Gamma/\gamma \tag{29}$$

Only primitive graphs are one-loop graphs. Appears as the endpoint in tower

$$H_0 \subset H_2 \subset H_4 \subset H_6 \subset \cdots \subset H_\infty = H_{core} \tag{30}$$

- Gravity

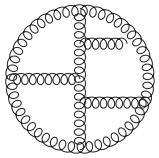

$\omega_4(\gamma) = 2|\gamma| + 2$

$$H_{ren} = H_{core} \tag{31}$$

All skeletons are one-loop.

core Hopf algebra structures: unitarity, gravity, BCFW

- The core Hopf algebra

$$\Delta(\Gamma) = \Gamma \otimes 1 + 1 \otimes \Gamma + \sum_{\gamma = \cup_i \gamma_i} \gamma \otimes \Gamma/\gamma \tag{29}$$

Only primitive graphs are one-loop graphs. Appears as the endpoint in tower

$$H_0 \subset H_2 \subset H_4 \subset H_6 \subset \cdots \subset H_\infty = H_{core} \tag{30}$$

- Gravity

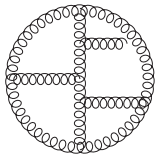

$\omega_4(\gamma) = 2|\gamma| + 2$

$$H_{ren} = H_{core} \tag{31}$$

All skeletons are one-loop.

- Britto-Cachazo-Feng-Witten recursion holds $\rightarrow$ Maximal Co-ideals of H_{core} respected by Feynman rules. Gravity possibly renormalizable iff full cut-reconstrucbility holds (∞-ly many Ward ids suggested).

QED

- sub Hopf algebra for vacuum polarization suffices

QED

- sub Hopf algebra for vacuum polarization suffices
- $\gamma_1(x) = P(x) - \gamma_1(x)^2 + \gamma_1(x) x \partial_x \gamma_1(x)$ with $P(x) > 0$

QED

- sub Hopf algebra for vacuum polarization suffices
- $\gamma_1(x) = P(x) - \gamma_1(x)^2 + \gamma_1(x) x \partial_x \gamma_1(x)$ with $P(x) > 0$
  $P(x)$ twice differentiable
  $\gamma_1(x_0) = \gamma_0 > 0$
  different solutions distinguished by $e^{-\frac{1}{x}}$ behaviour
  $\frac{d\gamma_1}{dx} = \gamma_1 - \gamma_1^2 - P,$
  $\frac{dx}{dL} = x\gamma_1$
  $L = \int_{x_0}^{x(L)} \frac{dz}{z\gamma_1(z)}$

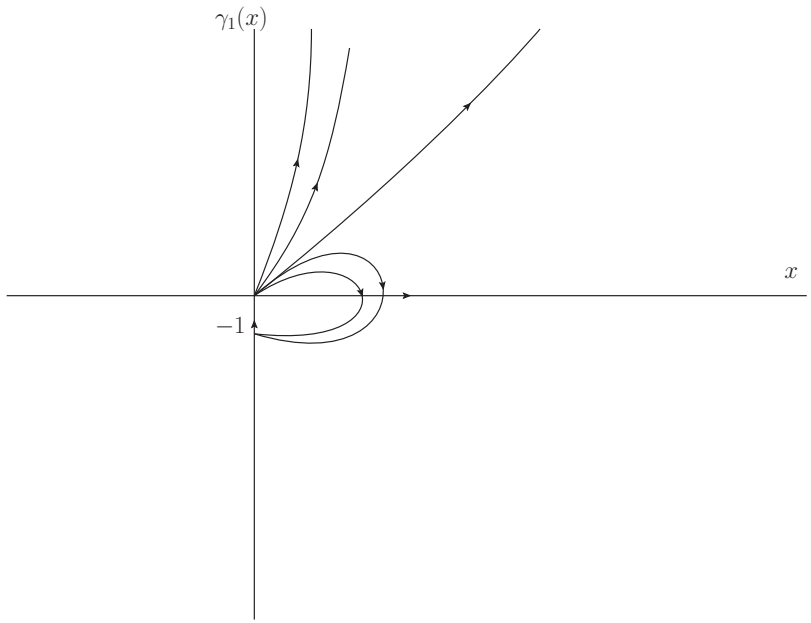

- separatrix exists and might have no Landau pole:
  $D(P) = \int_{x_0}^{\infty} \frac{P(z)dz}{z^3} < \infty, \int_{x_0}^{\infty} \frac{2dz}{z\sqrt{1+4P(z)}-1} < \infty$

QCD

- sub Hopf algebra for gluon polarization suffices in background field gauge

QCD

- sub Hopf algebra for gluon polarization suffices in background field gauge
- $\gamma_1(g) = P(g) - \gamma_1(g)^2 + \gamma_1(g) g \partial_g \gamma_1(g)$ with $P(g) < 0$

QCD

- sub Hopf algebra for gluon polarization suffices in background field gauge
- $\gamma_1(g) = P(g) - \gamma_1(g)^2 + \gamma_1(g) g \partial_g \gamma_1(g)$ with $P(g) < 0$
  $P(g)$ twice differentiable
  and concave near 0
  unique solution which
  flows into $(0,0)$ at large
  Q^2
  $L = \int_{g_0}^{g(L)} \frac{dz}{z\gamma_1(z)} \rightarrow$
  $L_\Lambda = -\int_{g(L_\Lambda)}^{\infty} \frac{dz}{z\gamma_1(z)}$,
  $L_\Lambda = \ln Q^2/\Lambda_{QCD}$
  $f_{disp}(Q^2) = \int_0^\infty \frac{\Im(f(\sigma))d\sigma}{\sigma + Q^2 - i\eta}$
  and ODE

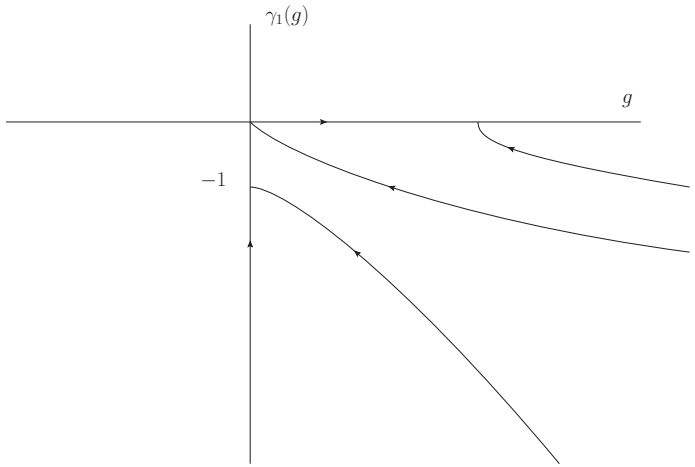

- separatrix exists and gives asymptotic free solution, with finite mass gap for inverse propagator iff $\gamma_1(x) < -1$ for some $x > 0$.
  $|D(P)| < \infty \rightarrow \gamma_1(x) \sim sx$, $x \rightarrow \infty$. That allows for dispersive methods as introduced by Shirkov et.al. in field theory.

Conclusions

- Hopf algebras are the natural habitat of renormalization

Conclusions

- Hopf algebras are the natural habitat of renormalization
- Locality reflected in Hochschild cohomology

Conclusions

- Hopf algebras are the natural habitat of renormalization
- Locality reflected in Hochschild cohomology
- perturbative structures suggest non-perturbative approaches

Conclusions

- Hopf algebras are the natural habitat of renormalization
- Locality reflected in Hochschild cohomology
- perturbative structures suggest non-perturbative approaches
- reflected nicely in the periods and special functions known by practitioners

Conclusions

- Hopf algebras are the natural habitat of renormalization
- Locality reflected in Hochschild cohomology
- perturbative structures suggest non-perturbative approaches
- reflected nicely in the periods and special functions known by practitioners
- Unitarity, internal symmetry, gravity, multi-leg-recursions vs co-ideals...

Conclusions

- Hopf algebras are the natural habitat of renormalization
- Locality reflected in Hochschild cohomology
- perturbative structures suggest non-perturbative approaches
- reflected nicely in the periods and special functions known by practitioners
- Unitarity, internal symmetry, gravity, multi-leg-recursions vs co-ideals...
- Don't loose trust in local point-particle quantum fields!