CW SRF guns different solutions and our approach at DESY

presented by Elmar Vogel for the international team working on CW SRF guns at DESY (names at last slide)

Meeting of Hamburg Alliance New Beams and Accelerators, 5-7 September 2018

HELMHOLTZ RESEARCH FOR GRAND CHALLENGES

DESY.

Electron Beams for Continuous Wave (CW) FELs

photocathode gun technology providing high brightness beams

design beam parameters	CW SRF Gun for XFEL	APEX-1 CW Gun for LCLS II (NC)	pulsed NC XFEL Gun
bunch train duty cycle [%]	100	100	0.6
beam current [µA]	up to 25	up to 60	up to 27
bunch repetition rate [kHz]	1 000 to 100	620 to 100	up to 4 500
bunch charge [pC]	20 to 250	10 to 300	20 to 1 000
transverse emittance [µm]	0.4 to 0.8	0.2 to 0.6	0.2 to 1.0
beam energy at gun exit [MeV]	3	0.75	6.1
RF parameters			
operation frequency	1.3 GHz	186 MHz	1.3 GHz
accelerating gradient [MV/m]	21	19.5	31
electric peak (cathode) field [MV/m]	40	19.5	60
RF input power	750 W	~ 100 kW	~ 42 kW

The parameters of normal conducting (NC) pulsed guns can be met by superconducting (SC) guns operating continuous wave (CW).

A brief overview on SRF gun developments worldwide:

@ BNL, HZB, HZDR, KEK, PKU & SLAC

subsequent transparencies copied from summary by R. Calaga, B. Hall and J. Sekutowicz of working group 4 at TTC meeting 2018 at RIKEN Nishina Center:
https://indico.desy.de/indico/event/20010/timetable/#20180627.detailed
https://indico.desy.de/indico/event/20010/contribution/16 (summary by R. Calaga, B. Hall, J. Sekutowicz)

BNL SRF gun for cooling hadrons

At TTC presented by Kentaro Mihara

113 MHz CW SRF photo-electron gun providing a 1-2 nC bunches with modest normalized emittance ~ 5 µrad and rep-rate of 78 kHz for **Coherent electron Cooling (CeC)**.

Performance

The gun routinely generates at 1.25 MeV (kinetic) CW electron beam (typically 1.5-1.6 nC per bunch)

Measured parameters are significantly beyond the specification

- Maximum measured charge per bunch was > 10.5 nC
- Normalized emittance of 0.32 µrad was measured at 0.5 nC (bunches are 400 ps long diameter is ca. 4 mm)
- 2 months lifetime of high QE was achieved for CsK2Sb photocathode
- Maximal measured beam energy was 1.5 MeV

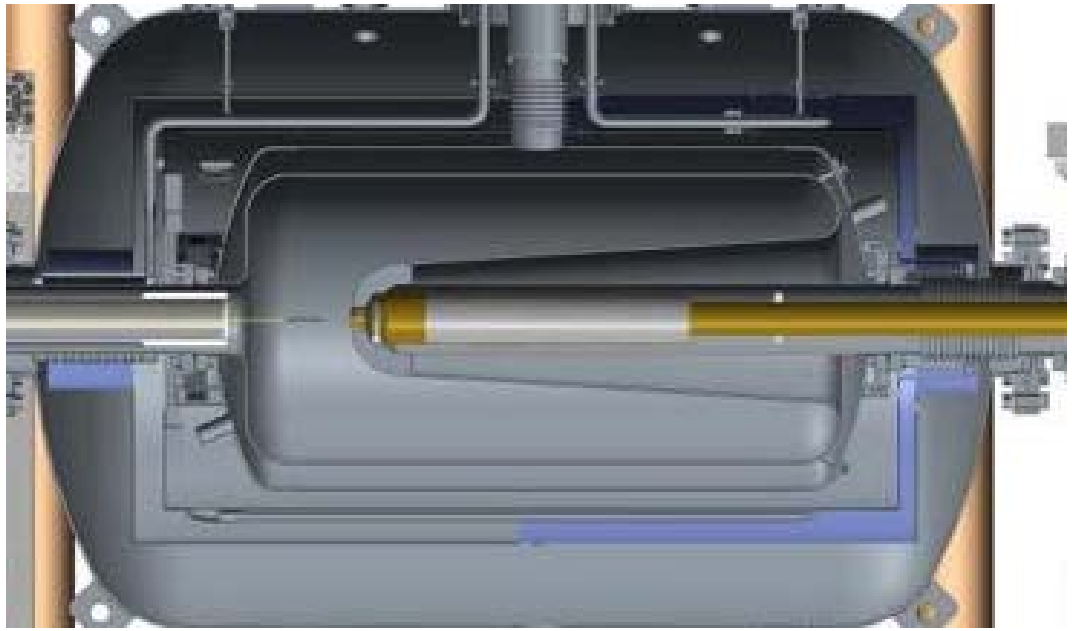

An example of proposed future research with CeC SRF gun

High current, long lifetime, ultra cold electron source

Diamond amplifier

- Extremely small angular distribution
- Not sensitive to residual gas/quick recovery
- High average current

HZB SRF gun for bERLinPro (energy recovery project)

At TTC presented by Julius Kühn & Thorsten Kamps

HZB is developing SRF gun with **CsKSb cathode to generate 100 mA** beam for energy recovery project.

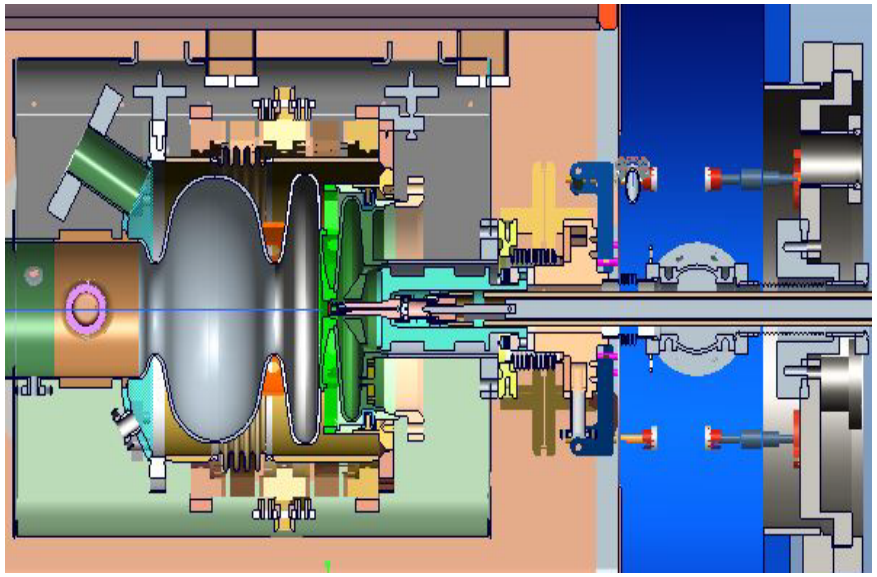

Beam energy	2.3 MeV
Max. I_{beam}	100 mA (77 pC at 1.3 GHz)
ε_n	< 0.5 mm mrad
Bunch length	< 2 ps
$E_{cathode}$	30 MV/m

Results with Gun 1.1: Eo= 26MV/m @ Qo=3E10@1.8K

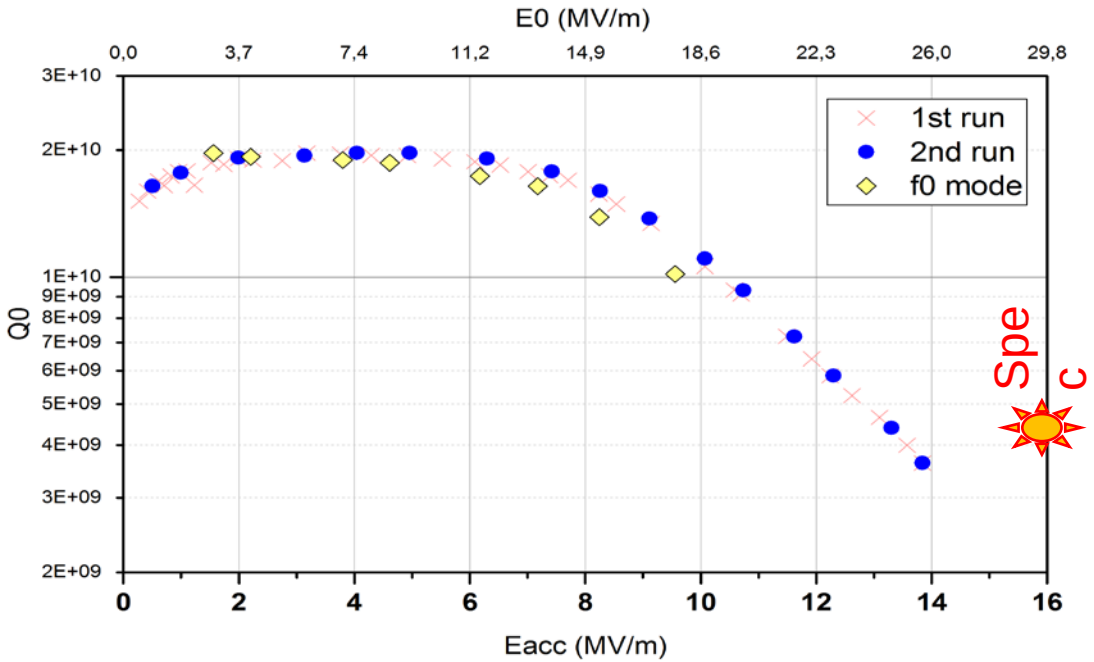

First test performed with Cu cathode and not precisely tuned choke filter. Positioning of the Cu cathode is critical. Transferring CsKSb cathode seems also not easy. HZB works to fix these issues.

HZDR SRF gun for ELBE (delivers multiple secondary beams)

At TTC presented by Jochen Teichert

ELBE photo injector operates for experiments since August 2014!

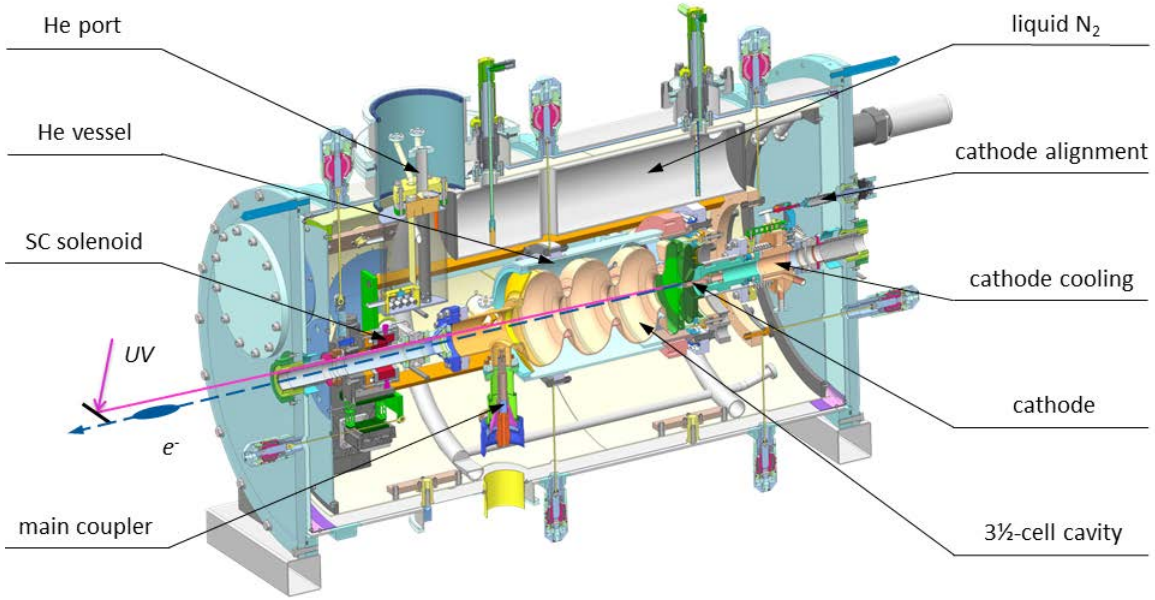

	CW beam at present
Acceleration field	8 MV/m
Peak field on axis	20.5 MV/m
Cathode field	14.4 MV/m
Kinetic energy	4 MeV
q	up to 300 pC

ELBE SRF gun operates mainly with **Mg cathode** which QE is in the range of 0.3 % … 0.5 %. Cathode is **very robust**.

Laser parameters:

- UV laser @ 258 nm, 0.5 W CW
- Pulse 100 kHz@Energy ≤ 5 µJ or 13 MHz@Energy ≤ 0.04 µJ
- Gaussian shape 5-6 ps FWHM

KEK SRF gun for KEK-ERL (energy recovery linac) project

At TTC presented by Taro Konomi

- KEK is developing SRF gun for future linac based accelerators.
- The target parameters are set for KEK-ERL project.
- The **photocathode is excited from the backside** to keep low intrinsic emittance.

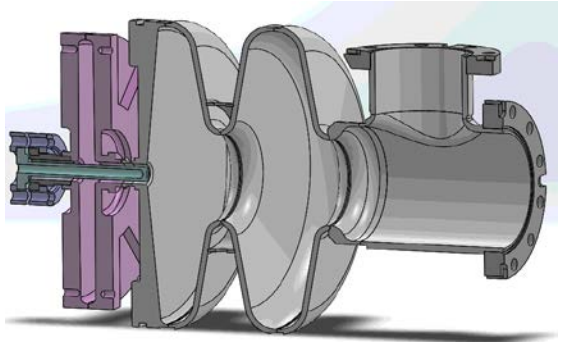

RF frequency	1.3 GHz
Beam energy	2 MeV
Current	100 mA
Bunch length	3 ps
Bunch charge	77 pC
Repetition f	1.3 GHz
ε_n	< 1pi mm mrad

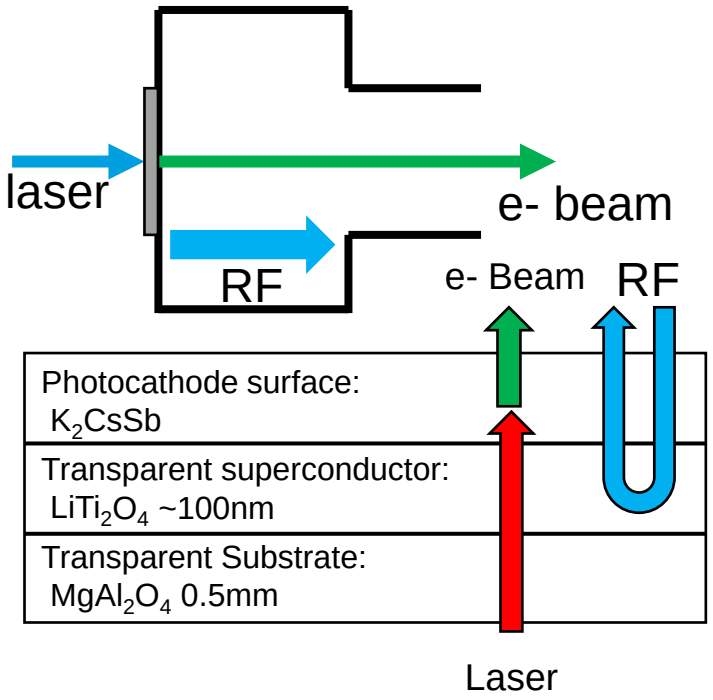

Test of Gun1: E_{cath} ca. 67MV/m !

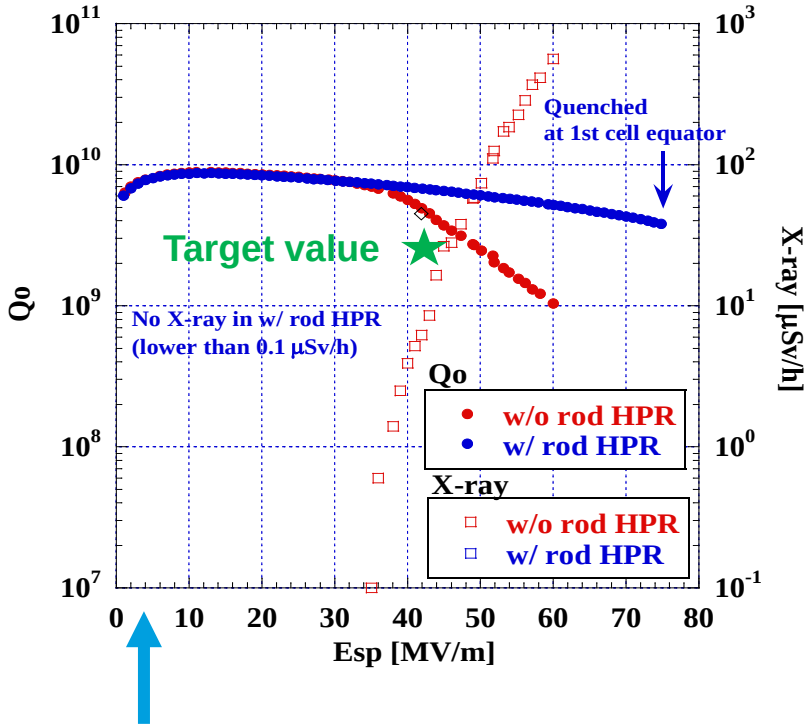

Gun 1 was tested very successfully after the HPR had been applied to cathode rode.

Gun 2 and load lock system is under fabrication.

DC SRF photo injector at Peking University

At TTC presented by Kexin Liu

PKU operates the DC-SRF photo injector since 2014!

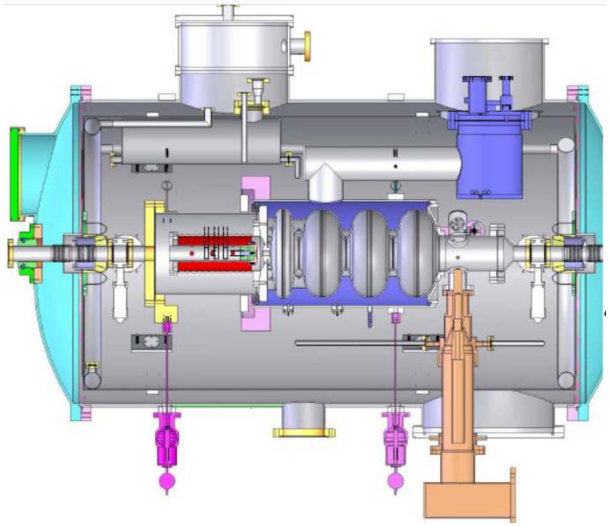

Performance of the DC-SRF gun

- Operational life time: months
- Average currents: up to 1.0 mA
- Epeak: 30.7MV/m
- q/Bunch : 12 pC
- DC voltage: 50 kV
- Energy Gain: 3.4MeV
- Rep. frequency: up to 81.25 MHz
- Trans. emittance: 1.5 µrad
- Dark current: ~1nA

Main effort at present is optimization of parameters to lower the emittance. Modelling proved that emittance can be significantly improved to 0.5 µrad@100pC by:

- Increasing **DC voltage to 100 kV**
- Shaping of the drive laser pulse->11.3 ps
- Setting Eacc to 23 MV/m and phase to -17deg.
- Solenoid optimization B=840 Gs and position 1.25m
- Using K_2CsSb cathode at 20K

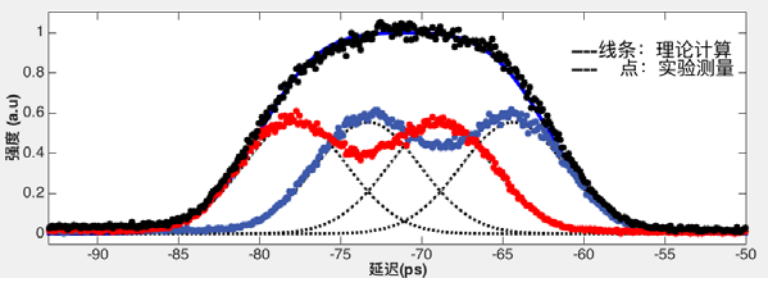

Experimental result of the pulse shaping

SRF Gun Project at SLAC (for LCLS-II HE and UED/UEM)

At TTC presented by Bruce Dunham & Nora Norvell

SLAC recommissions the **200 MHz ¼ wave WiFEL gun**. The motivation is opportunity to demonstrate SRF gun technology for both LCLS-II HE and UED/UEM (Ultrafast Electron Diffraction / Microscopy).

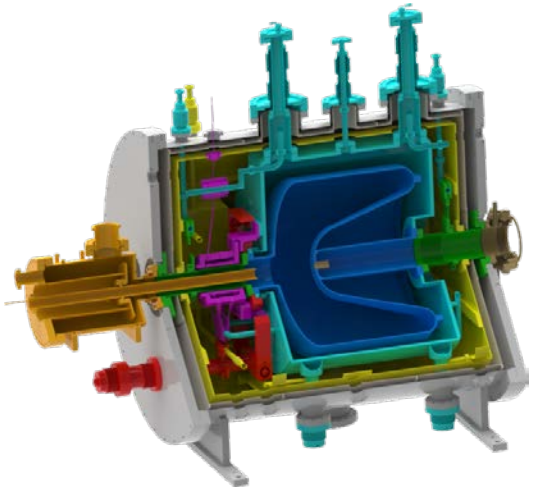

Design parameters

- 45 MV/m gradient
- 4.0 MeV beam energy
- 1 um emittance @ 200 pC

Recommissioning goals

- Validate hardware survived relocation
- Replicate previous results

Previously demonstrated performance

Q_0 > 3e9

- 26 MV/m gradient w/o photocathode
- 12 MV/m gradient w/ Cu photocathode
- 1.1 MeV beam energy
- 0.7 µm emittance for 12 pC @ 1.1 MeV
- 1.5 µm emittance for 100 pC @ 1.1 MeV

SLAC SRF Gun Beamline Layout

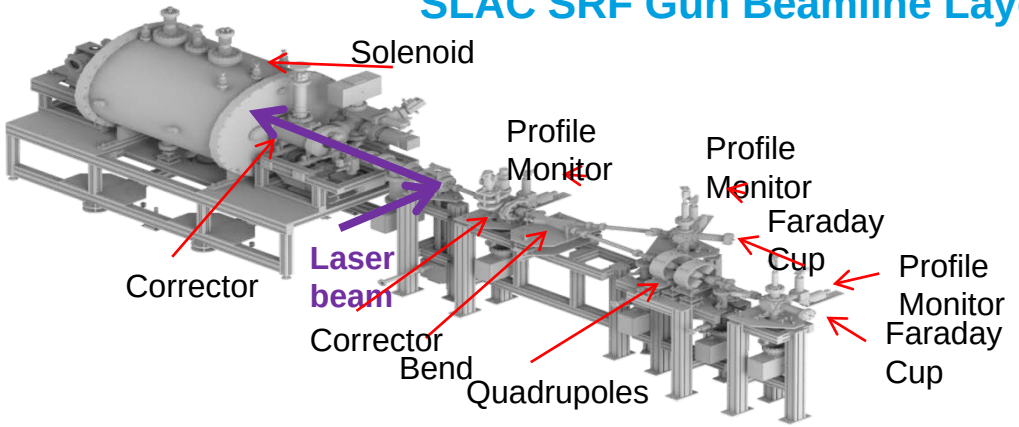

Next Steps

- application for funds to purchase a 4K 100W closed-loop Helium System
- Design and build a cathode load lock system
- Replace the copper coating on the cathode tube
- Fix the laser-RF synchronization
- Add an accurate emittance measurement system

DESY approach for a CW SRF gun

All Superconducting Gun

for optimal integration of cathodes in an ultra-clean SC cavity

existing cathode insertion systems still face challenges

- w.r.t. multipacting, field emission, cathode heating, cathode lifetime, etc.
- R&D still required and ongoing
- e.g. performed at HZDR and HZB

DESY approach: superconducting (sc) cathode attached to the cavity backside

☺ cleaning after cathode insertion in a clean room

☺ cathode particles (lead) should not heat and quench the cavity

😐 exchanging the cathode

⇨ only reasonable with cathode lifetimes above 100 days

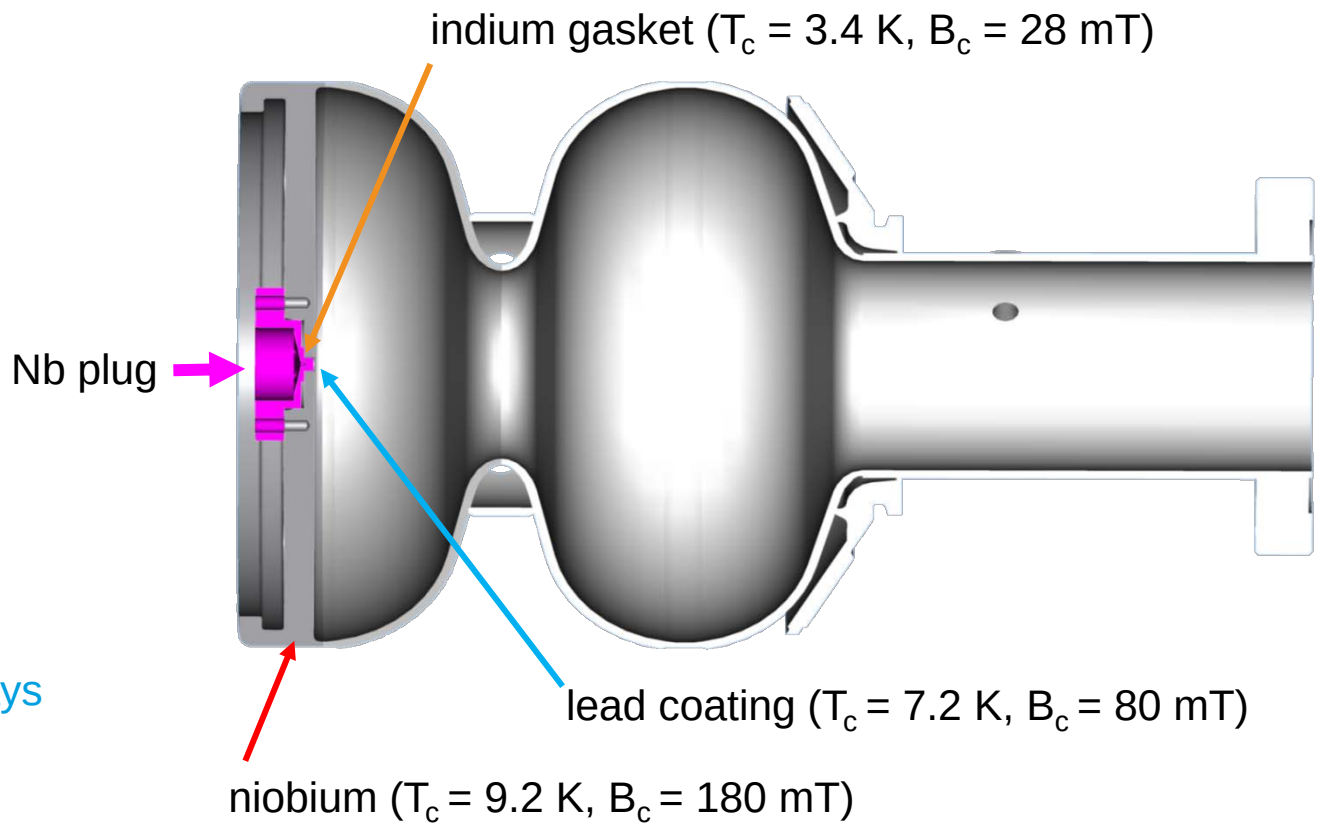

We Achieve the Required Gradients

results from cavity '16G2'

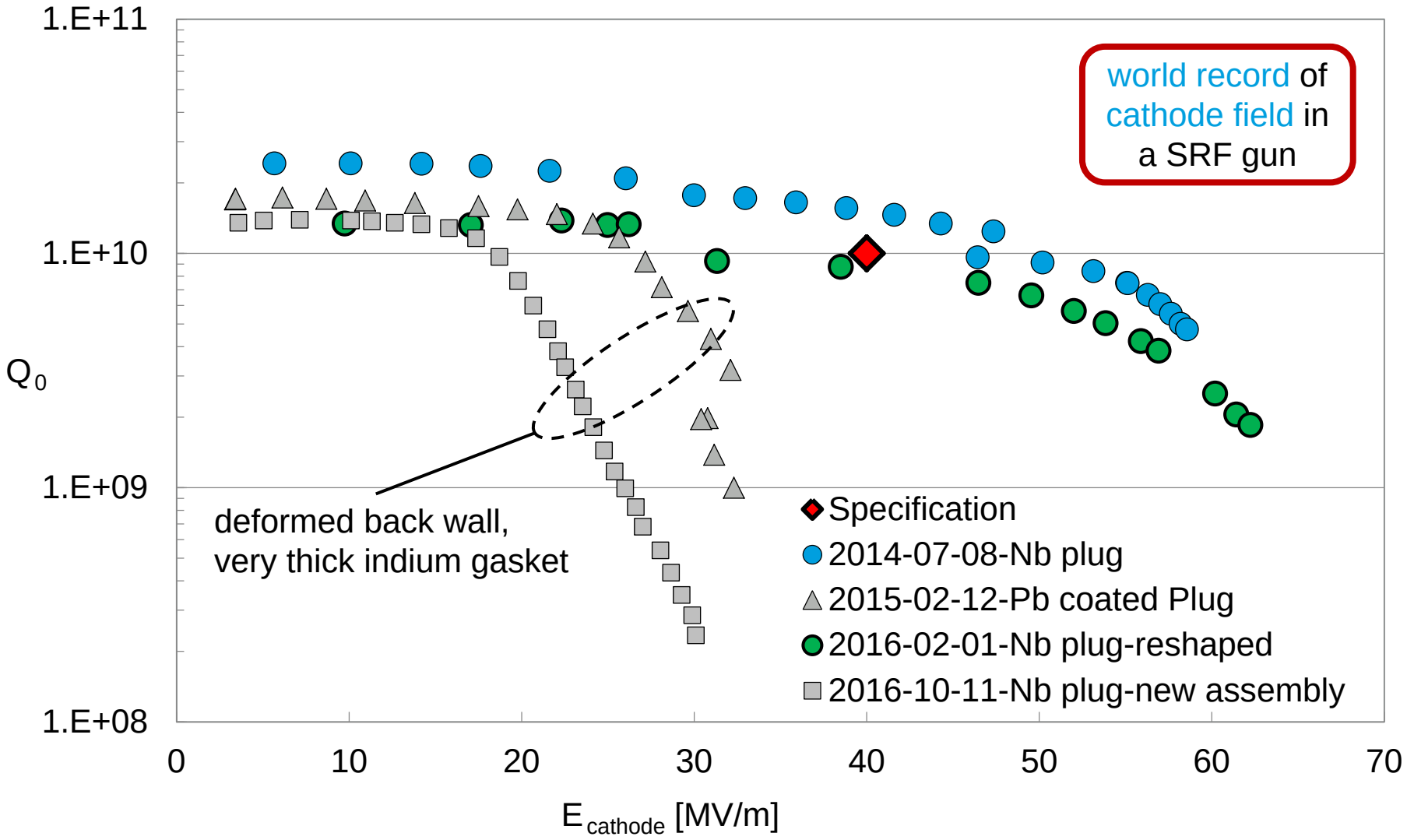

Quantum Efficiency (QE) and Cathode Lifetimes

successful collaboration with John Smedley (BNL) measuring the QE of DESY cathodes

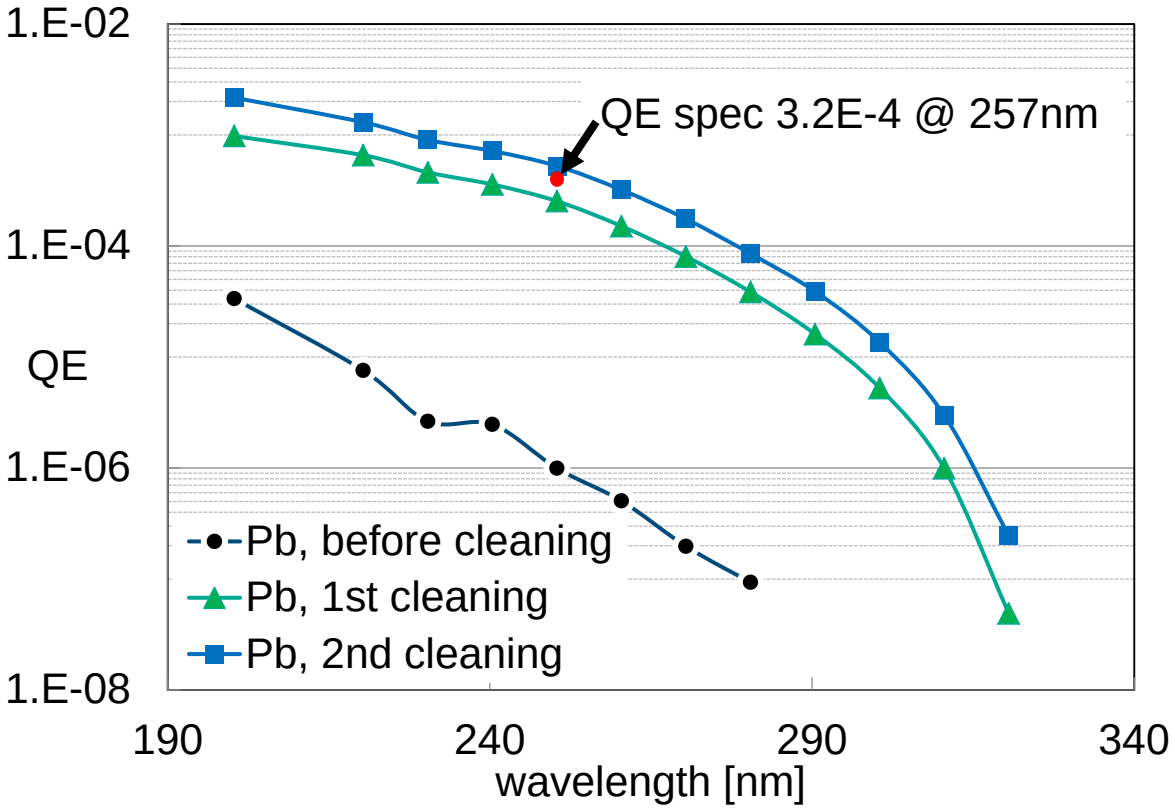

Laser cleaning (at 248nm):

- 1st 1000 shots with 0.06 mJ/mm^2
- 2nd 10000 shots with 0.06 mJ/mm^2

successful collaboration with Jochen Teichert (HZDR) testing the lifetime of DESY cathodes

long time test

- 550 hours of irradiation

⇨ only small QE variations

Quantum Efficiency (QE)

⇨ sufficient for the specified bunch charge
using an industry built laser

⇨ so far no degradation over time

Next Step: Putting It All Together

Goal: Demonstration of a sufficiently long lifetime of the cathode irradiated with a laser in a cavity operating at the design gradient and generating electron bunches with charge up to 250 pC.

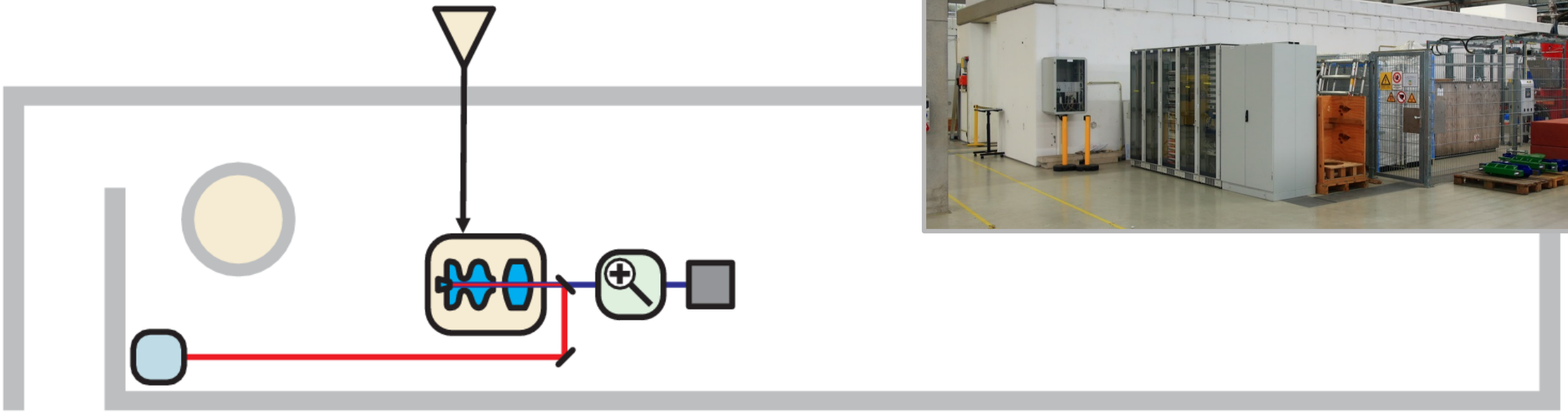

cathode laser | cryomodule | RF power amplifier | beam dump

1.6 cell gun cavity | beam diagnostics | focusing magnet | cryogenic valve box

The New SRF Gun Cavities 16G3 and 16G4

built in spring 2017 together with industry

improved mechanical design of the backside

- backside mechanically reinforced
- titanium thread inserts
- improved cathode plug design
- design validation by a mechanical model
- new auxiliaries like cavity handling frames

achievements

- backside without deformation
- leak tight

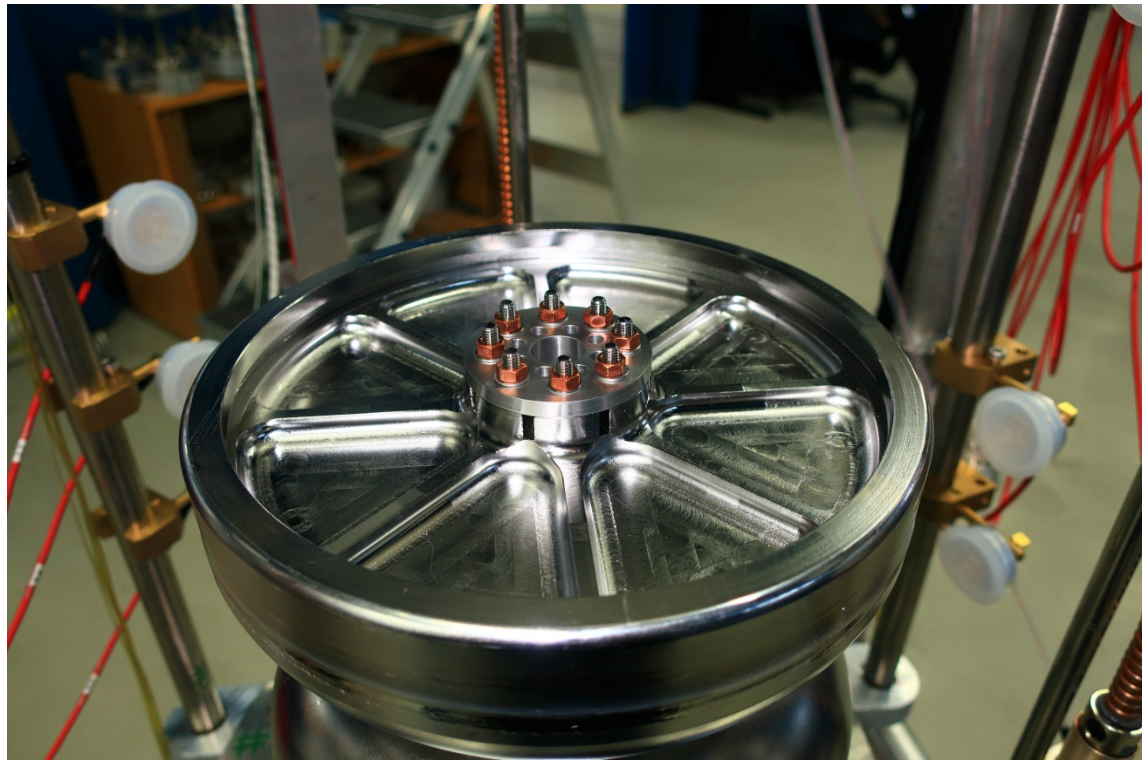

Surface Treatment for SRF Gun Cavities

similar to the ones applied at 9 cell accelerating cavities

at DESY we have well-established procedures for single- and nine-cell cavities

⇨ acid and water can flow through two big holes

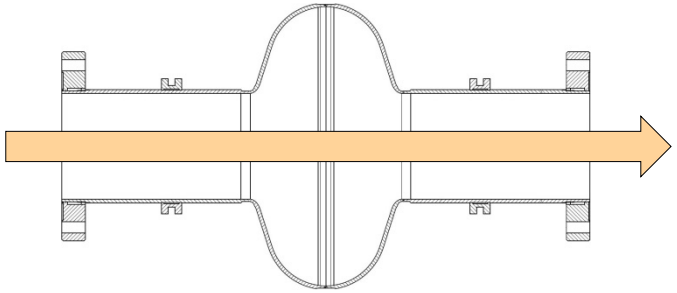

the half cell and the small cathode hole

⇨ require a unique approach

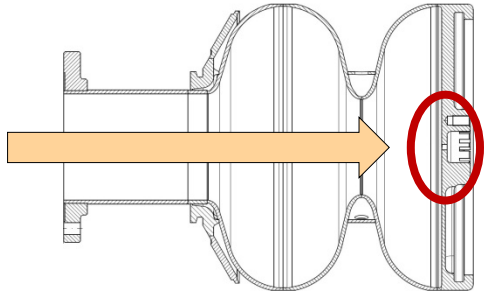

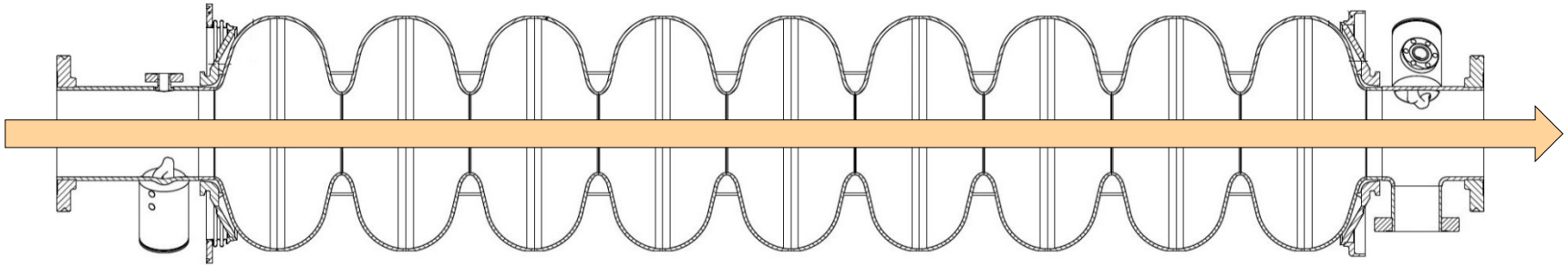

Recipe and treatment

developments performed & improvements ongoing

- adaptation of the electro polishing (EP) apparatus
- new EP cathode has been developed avoiding dents at the backside
- new high pressure (HPR) rinse nozzle head for optional cleaning of the half-cell and avoiding directly impacting the cathode area

developments ongoing

- acrylic glass models to study the HPR

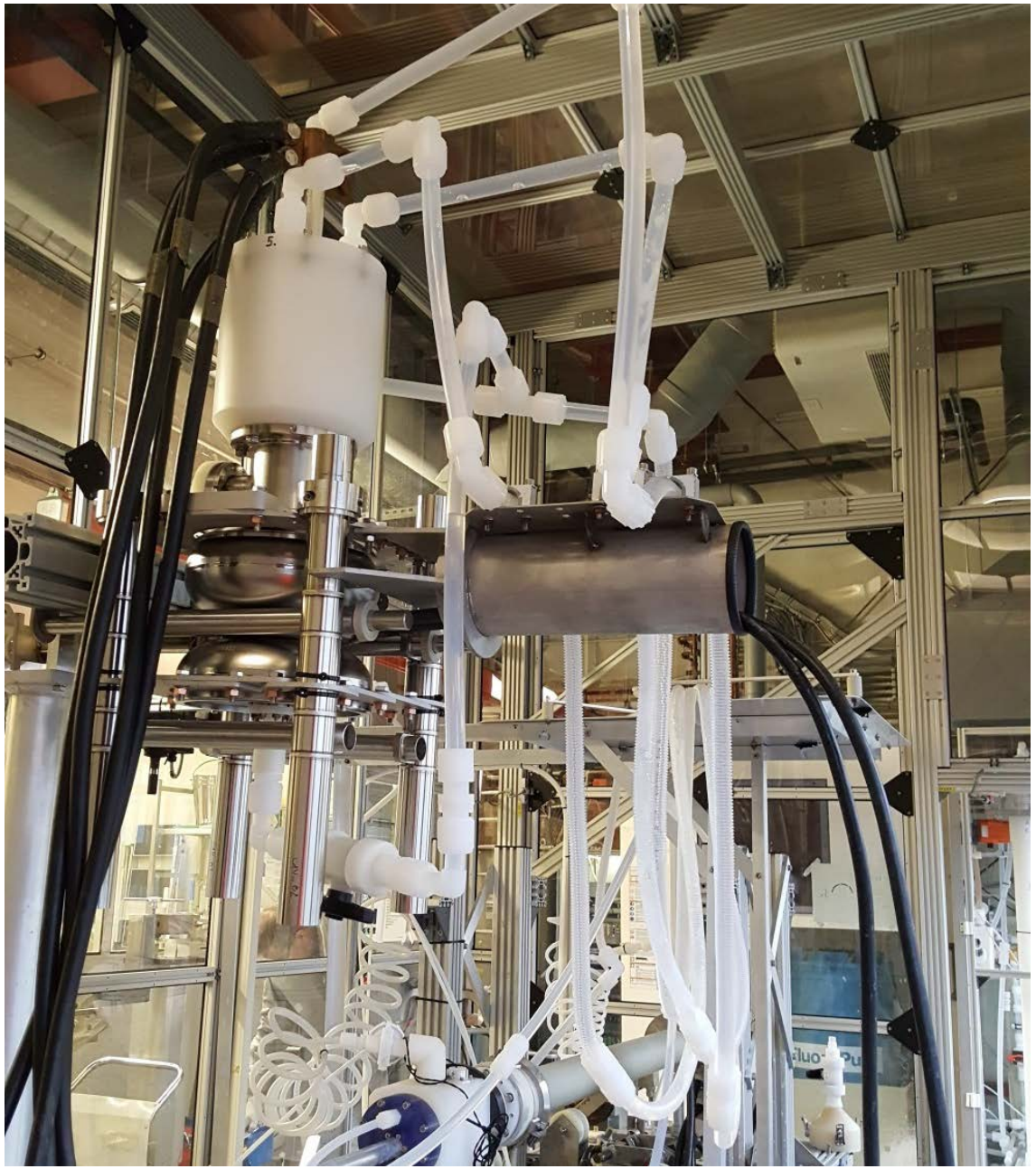

Cathodes and Cathode Plugs

three types under investigation

- lead coated niobium plug
- bulk lead disc on niobium plug
- bulk lead plug

focus of R&D

- preparation of niobium plugs before coating
- lead coating (by NCBJ, Poland)
- clean room compatibility

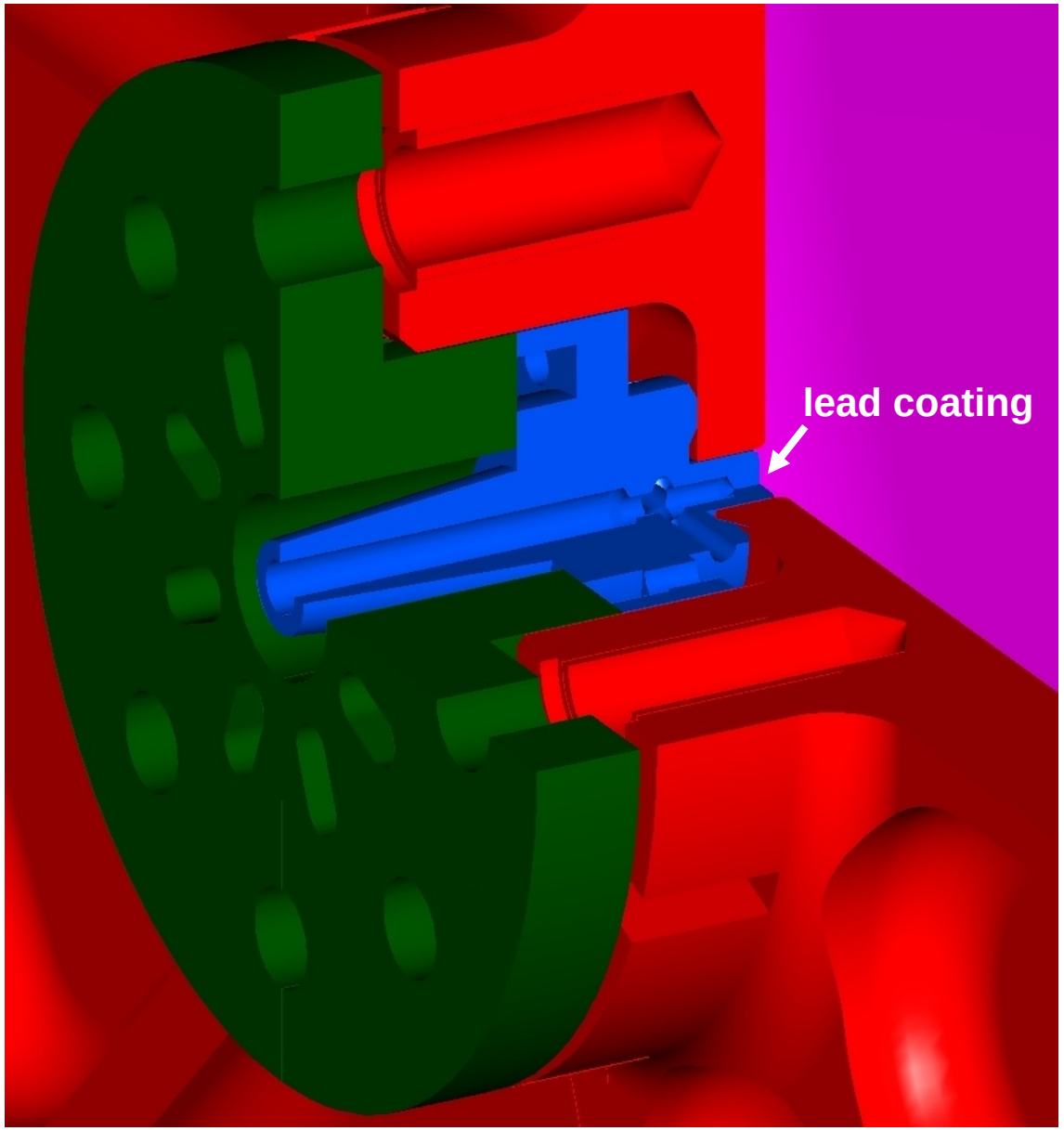

niobium plug (blue) screwed to cavity backside

Cold tests of 16G3 and 16G4

vertical tests performed end 2017 and beginning 2018

- at temperatures: 2 K, 1.8 K and 1.6 K
- normal cool down
- slow cool down (from 12 K with ap. -0.1 K / min)
- in all cases maximum gradients below spec. (40 MV/m)

  E_{cath} = 23 MV/m to 37 MV/m
- no field emission observed
- 'second sound' analysis done (results preliminary)

hence, something is or was not optimal

- some rough area at surface visible
- surface removal by BCP may be less sensitive on the cavity geometry than by EP
- next step: BCP + flash EP - like done with 16G2

goal: next vertical tests after BCP in **Q4/2018**

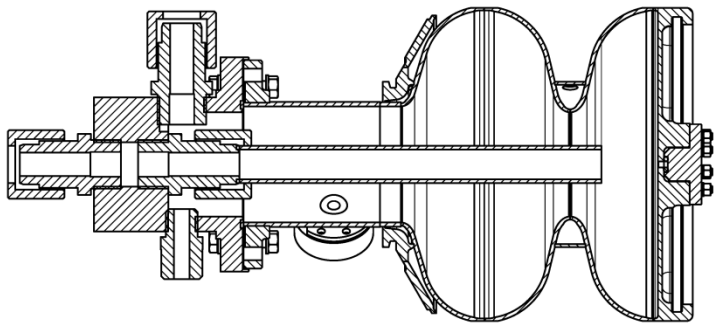

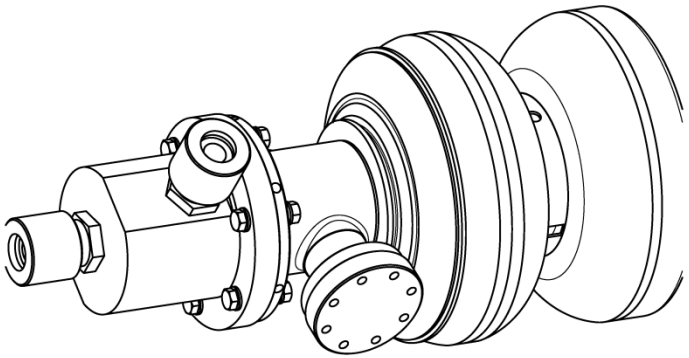

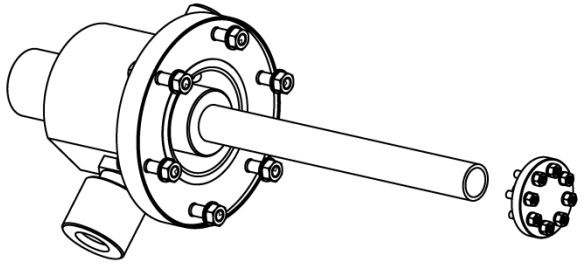

SRF Gun Cryomodule

development and construction of the cryomodule

- for future flexibility, HZDR and HZB SRF gun cavities should also fit
- special features: ability to align the beam line when the module is cold, likewise the (cold) solenoid

there is a common interest from HZDR, HZB and DESY

- meetings at HZB and HZDR
- copies of this SRF gun cryomodule may later be used at all three laboratories

goal: **design finalized** in **Q3/2018**

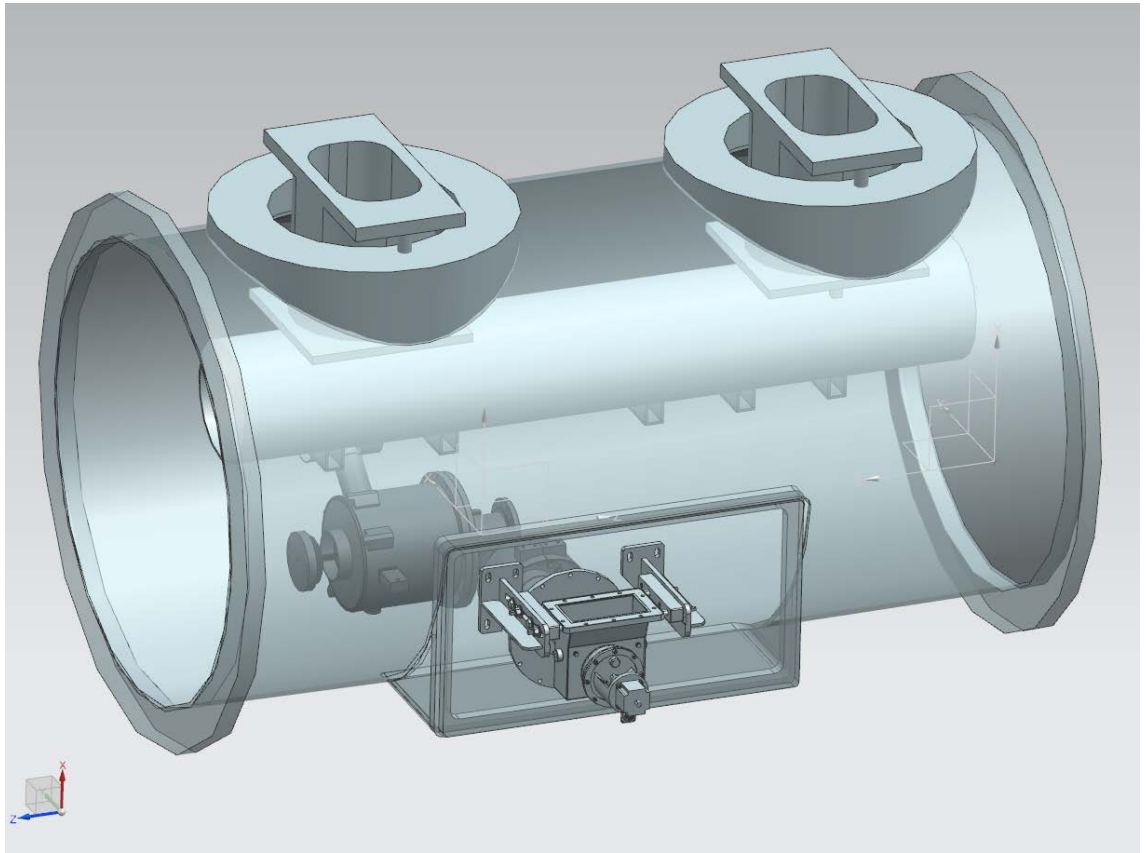

first draft of the SRF gun cryomodule

Cathode Laser

we are purchasing an industry built laser (Pharos), similar to the ones already used at DESY

after the laser arrives at DESY

- setup of the laser in the laser laboratory
- commissioning in Q3/2018
- QE measurements of lead cathodes
  by copying the QE measurement setup from HZDR
- studies for scanning the cavity backside to locate the cathode
- setup: mirror chamber, dummy beam line, SRF cavity backside complete with cathode plug

laser parameter	specification
wavelengths	1030 nm / 515 nm / 257 nm
pulse length (FWHM)	150 fs – 15 ps (UV)
repetition rate	single-shot – 1.1285 MHz
average power in UV	1 W @ 100 kHz 2 W @ 100 kHz (short period)
max. pulse energy in UV	10 µJ @ 100 kHz (short term 20 µJ)
special features	output from oscillator for synchronization, actuator to stabilize laser oscillator, spare parts for fast harmonic module exchange

Summary

achievements

- required gradient surpassed in vertical test
- QE sufficient for the specified bunch charge
- no QE degradation (within 550+ hours)

integrated test activities include

- improved SRF gun cavity design
- surface treatment (ongoing)
- cathodes and cathode plug design and treatment
- SRF gun cryomodule (available Q2/2019)
- cathode laser (expected at DESY Q2/2018)
- adaptation of an AMTF test stand (done Q2/2019)
- beam dynamics (looking for personnel started)

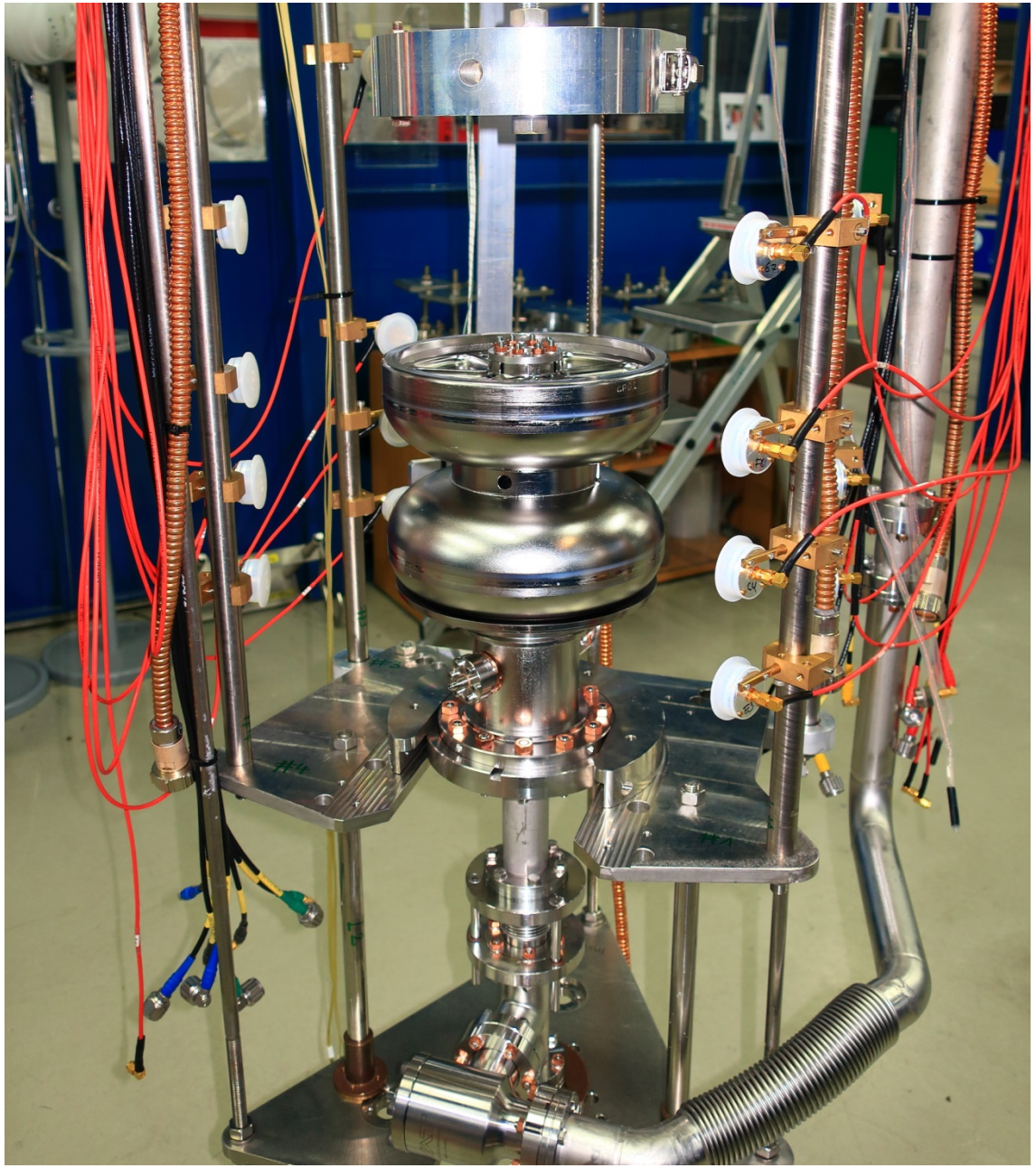

Strong Team Effort

even more colleagues will join in future

DESY: Serena Barbanotti, Andrea Bellandi, Yury Bozhko, Julien Branlard, Thorsten Büttner, Michael Ebert, Matthias Felber, Ingmar Hartl, Birte van der Horst, Jens Iversen, Kay Jensch, Daniel Klinke, Denis Kostin, Wolf-Dietrich Möller, Bernd Petersen, Andrea Muhs, Detlef Reschke, Holger Schlarb, Manuela Schmökel, Jacek Sekutowicz, Detlef Sellmann, Sven Sievers, Lea Steder, Nicolai Steinhau-Kühl, Alexey Sulimov, Jan-Hendrik Thie, Elmar Vogel, Hans Weise, Stefan Wilke, Lutz Winkelmann

BNL: John Smedley

HZDR: Jochen Teichert

IFJ PAN: Mateusz Wiencek

NCBJ: Robert Nietubyc, Jerzy Lorkiewicz

HZB: Yegor Tamashevich

Thank you for your attention