DHH Status Report

Dima Levit for the DHH group
Technische Universität München
Physikdepartment E18

DEPFET Collaboration Meeting

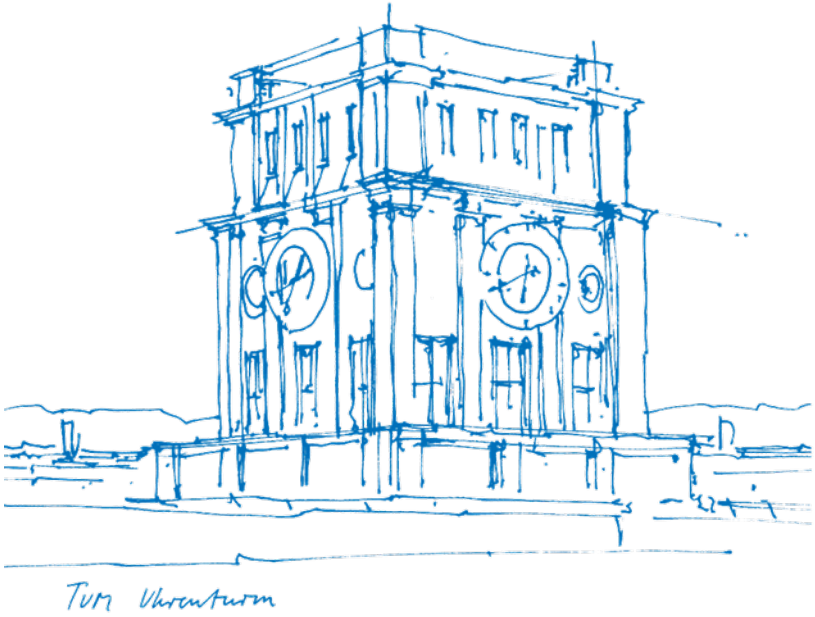

Overview

Load Balancing DHC Firmware

Optical Links

Cross-Point Switch

IPMC

DHH IOC

DHI Status

Available Modules

DHH Setup at Phase 3

Phase 3 PXD setup :

- 8x inner layer ladders + 2x outer layer ladders
- 4x DHH systems
- 4x ONSEN (25% of bandwidth)
- No GATED mode

DHH

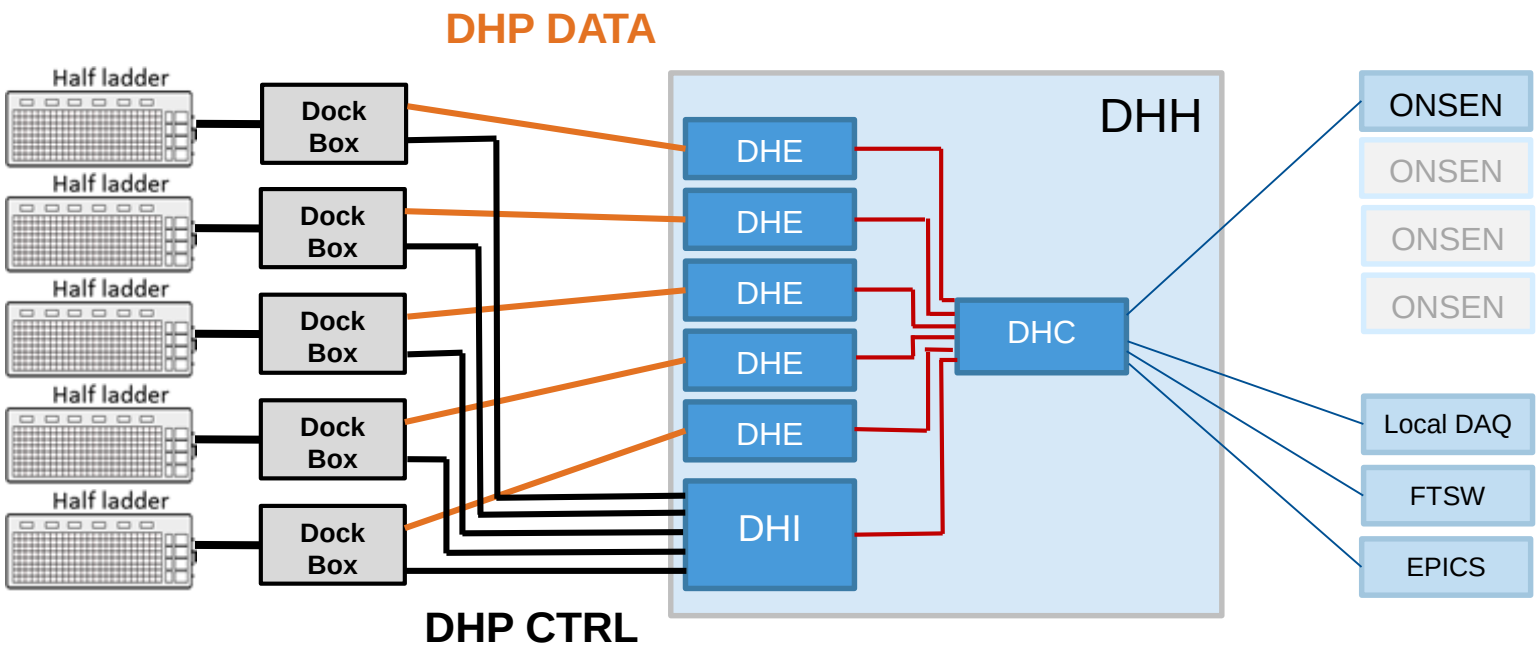

DHE Firmware at Phase 3

- High trigger rate capable => Trigger throttling
  - ✓ trigger rate is limited by bandwidth of DHE=>DHC or DHC=>ONSEN data links
  - ✓ DHE firmware limits : @10kHz no limit, @20kHz 2.5% occupancy, @30kHz 1.4% occupancy
  - ✓ Current PXD averaged occupancy below 0.1%

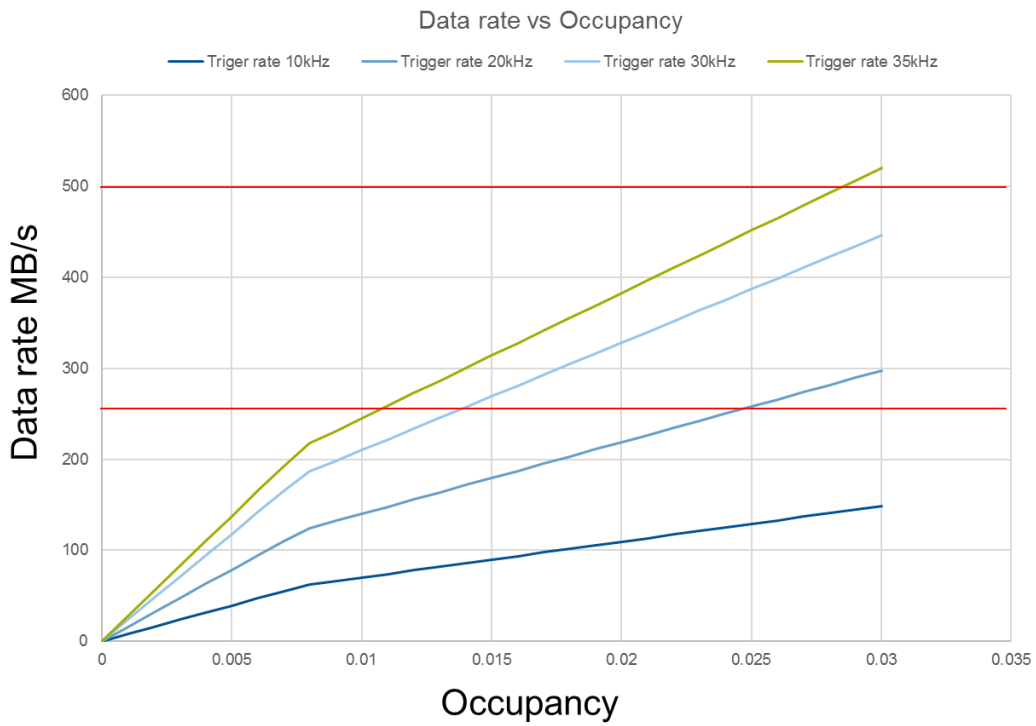

Possible link speed improvement
DHE=>DHC link 500 MB/s

Current limit
DHE=>DHC link 250 MB/s

Data Flow in DHC with Load Balancing

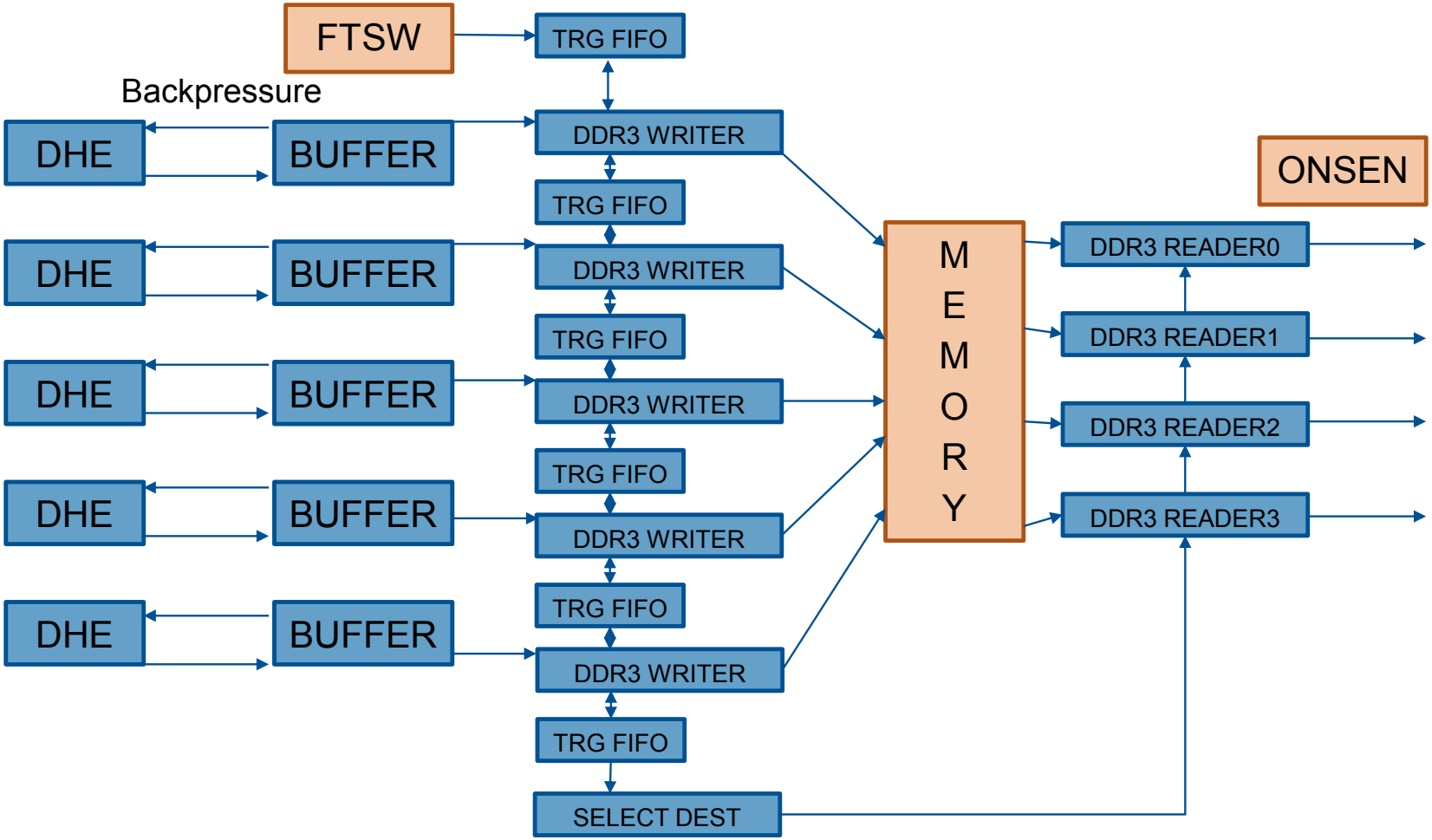

Test of the Firmware

- Installed and tested at KEK
- High trigger/data rate tests successful
  - 1 hour with FTSW at 30 kHz
  - **no errors** at 130 kHz Poisson, 0.5 us dead time, 0.2 % occupancy
  - trigger rate limited by links bandwidth
- Additional diagnostic was implemented in DHE and DHC
- Data order for ROI
  - **not possible in firmware** any more
  - possible with a new cross-point switch
    - change in the DHE assignment

Observed Problems

- ☑ Missing triggers and not-accepted BUSY at H40
  - swapped FTSW cables between H30 and H40
  - trigger lost in H30
  - ⇒ problem in FTSW or in RJ45 cable
- ☒ 10 % occupancy difference between FW and BW with a random test pattern
- ☑ DHC generates BUSY at high trigger rates (> 65 kHz) and low occupancy (0.2 %)
  - some data words repeat in data stream between DHE and DHC
  - clock compensation characters not sent for small frames and small hold-off times
  - solved by fixing the protocol

Data Rates

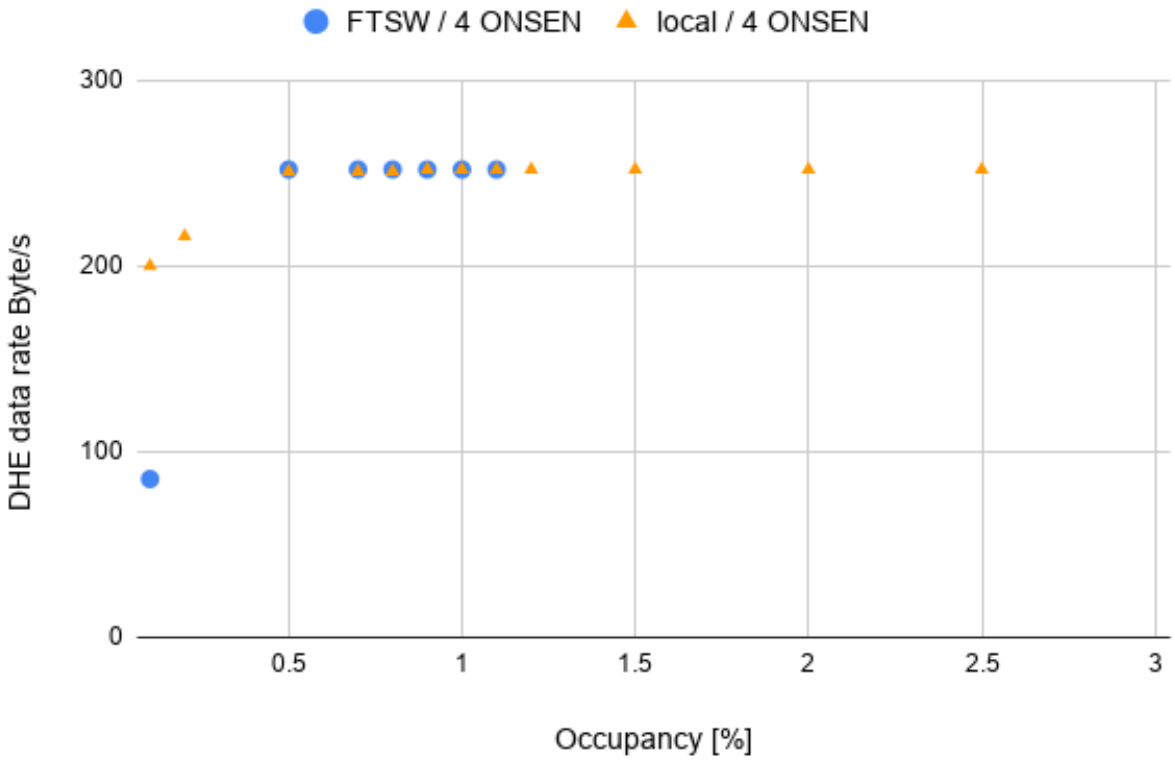
FTSW / 4 ONSEN
local / 4 ONSEN
300
200
100
0
DHE data rate Byte/s
0.5
1
1.5
2
2.5
3
Occupancy [%]

Trigger Rates

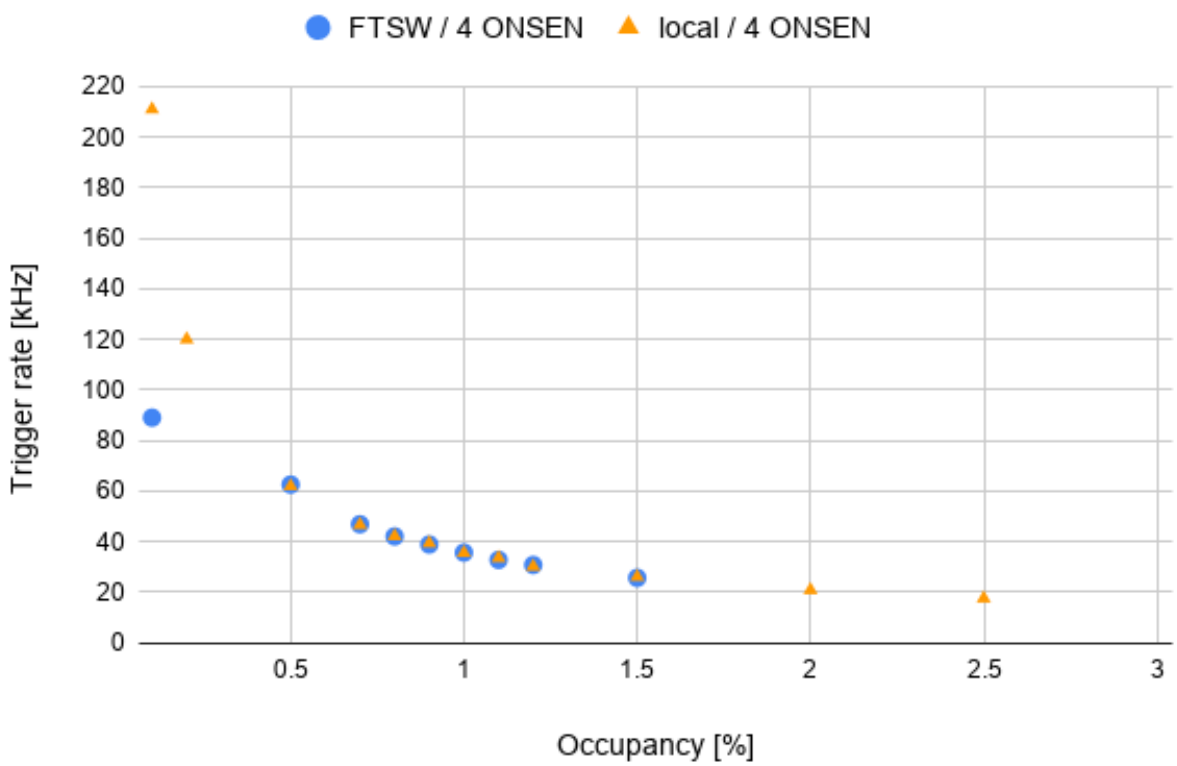

Optical Links Yield

23	module / fiber cable	1041 - F12-A DB4				1042 - F12-D DB5			
24	fibers (mpo)	4 (2)	9 (7)	7 (5)	2 (0)	8 (6)	5 (3)	3 (1)	6 (4)
25	intensities before phase3	0.35	0.34	0.33	0.34	0.37	0.38	0.34	0.35
26	intensities 8.07.2019 (Summer shutdown)	0.39	0.144	0.33	0.158	0.34	0	0.34	0.35
27	Difference before PH3 - summer shutdown 2019	-0.04	0.196	0	0.182	0.03	0.38	0	0
47	module / fiber cable	1081 - 8A DB2				1082 - F8-5 DB7			
48	fibers (mpo)	4 (2)	3 (1)	5 (3)	2 (0)	4 (2)	3 (1)	5 (3)	2 (0)
49	intensities before phase3	0.35	0.35	0.35	0.35	0.33	0.36	0.34	0.47
50	intensities 8.07.2019 (Summer shutdown)	0.36	0.35	0.38	0.27	0.0668	0.36	0.35	0.35
51	Difference before PH3 - summer shutdown 2019	-0.01	0	-0.03	0.08	0.2632	0	-0.01	0.12

Result of Investigation

- Broken link in transmitter **DB_PCB_3.1-37** (H1042)
  - dock box PCB exchanged
  - **no visible peculiarities**
  - sent to Glenair for diagnostics
  - tested radiation dose of the transmitter **250 kRad**
  - measured dose **50 Rad**

  ⇒ Extrapolated Belle II lifetime dose by F. Di Capua:
    - **400-500 kRad**
- Yield on other links improved by fixing optical fibers
  - clamps installed to fix fibers

  ⇒ stable optical power

- Transmitter on **DB_PCB_3.1-22** (H1031) non-functional after clamp installation
  - transmitter in **good shape**
  - **inductor missing** on DB PCB
  - will be ordered to repair the PCB

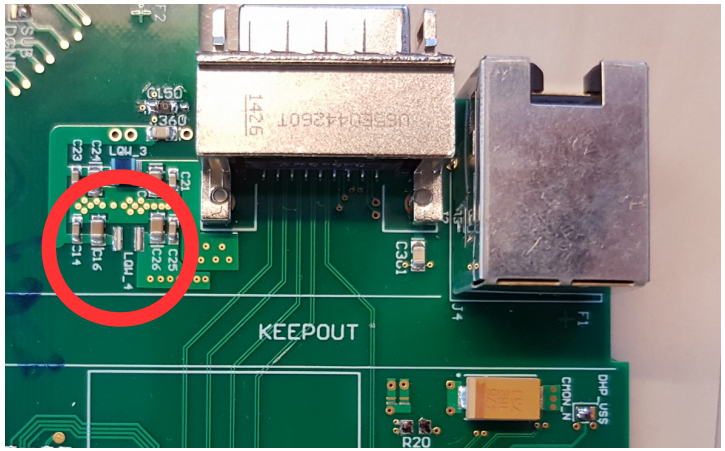

A Clamp on a Transmitter

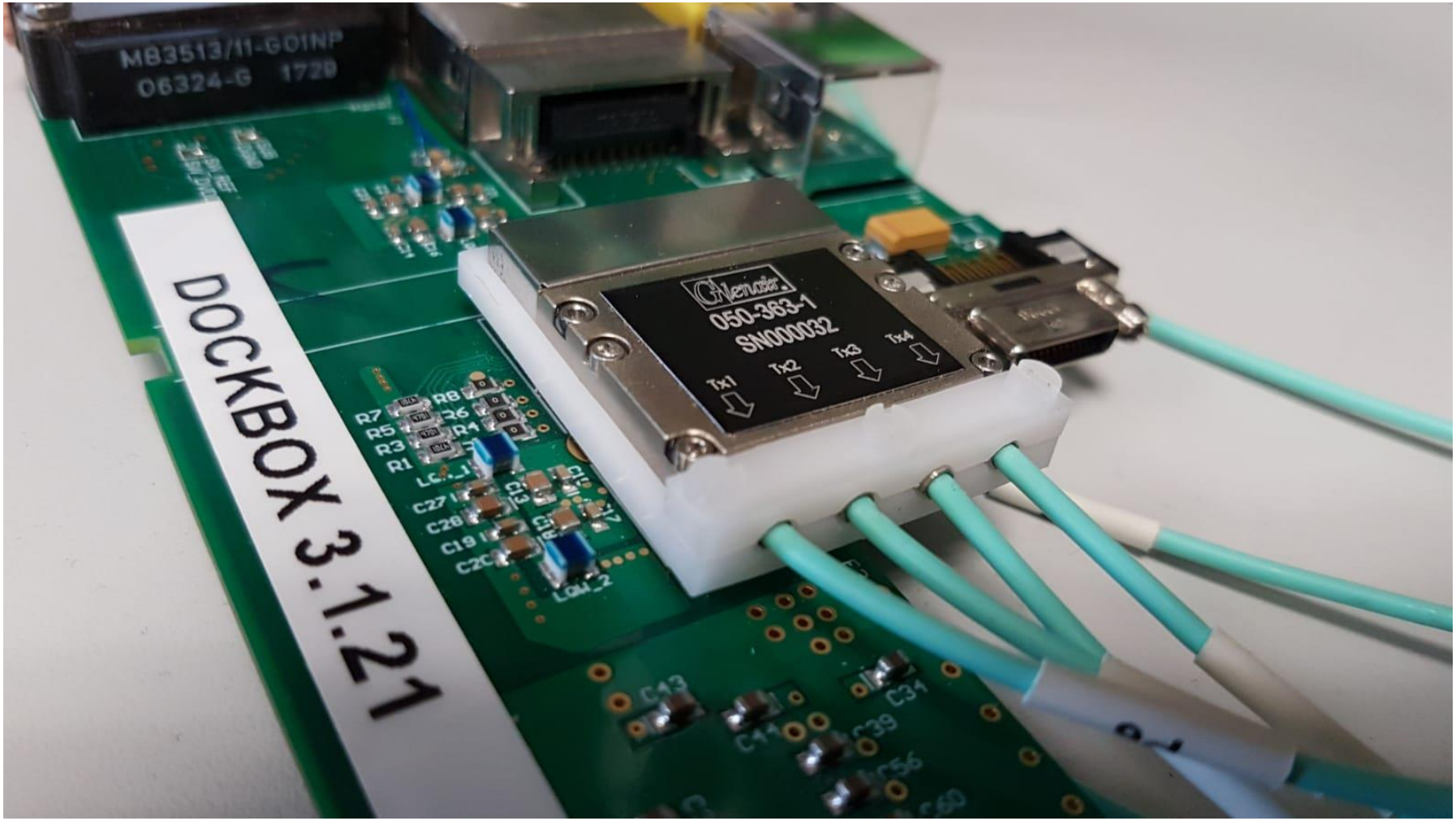

Measurement of the light power DHH 30 / 8ch

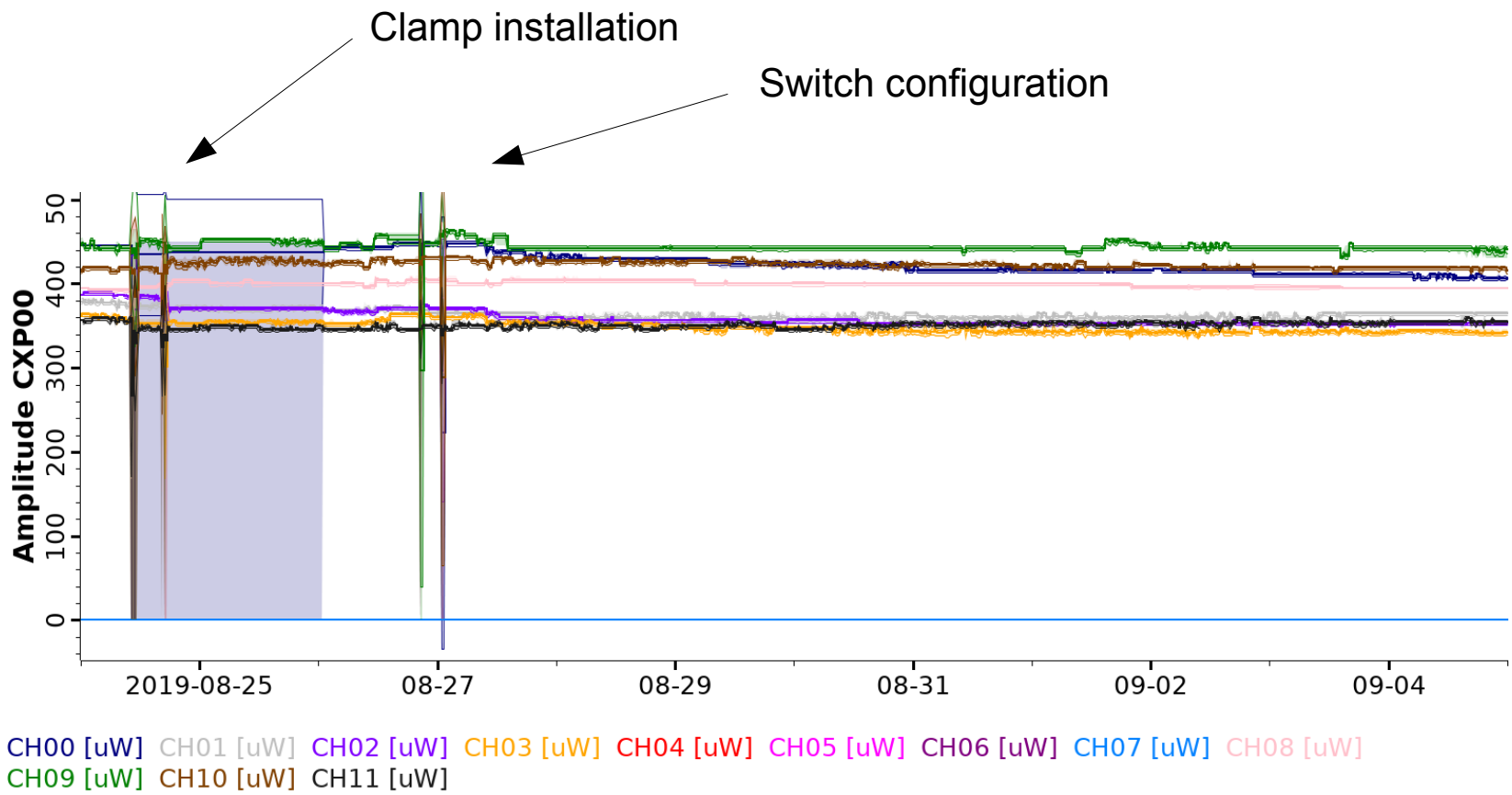

Measurement of the light power DHH 30 / 12ch

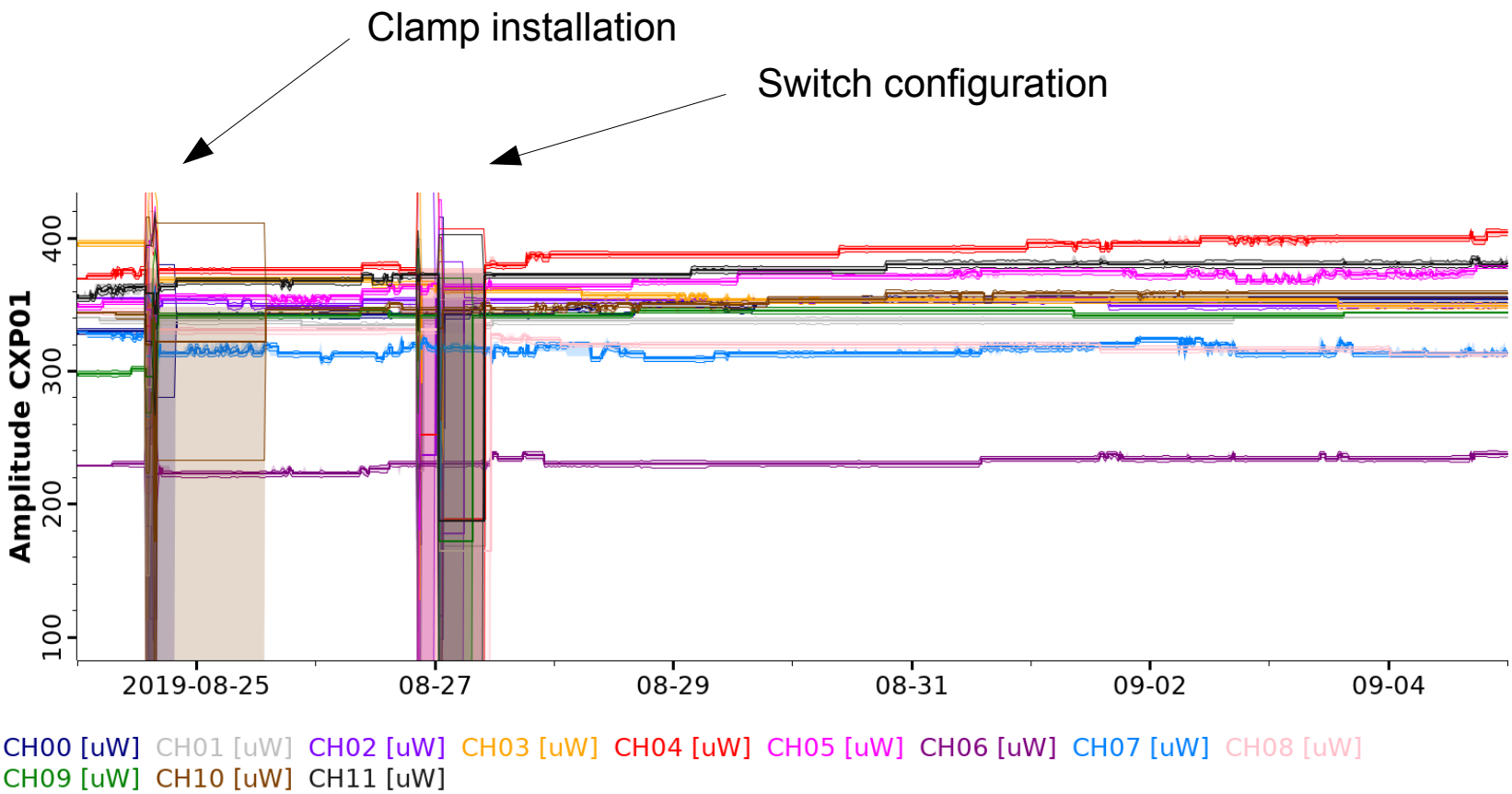

Measurement of the light power DHH 40 / 8ch

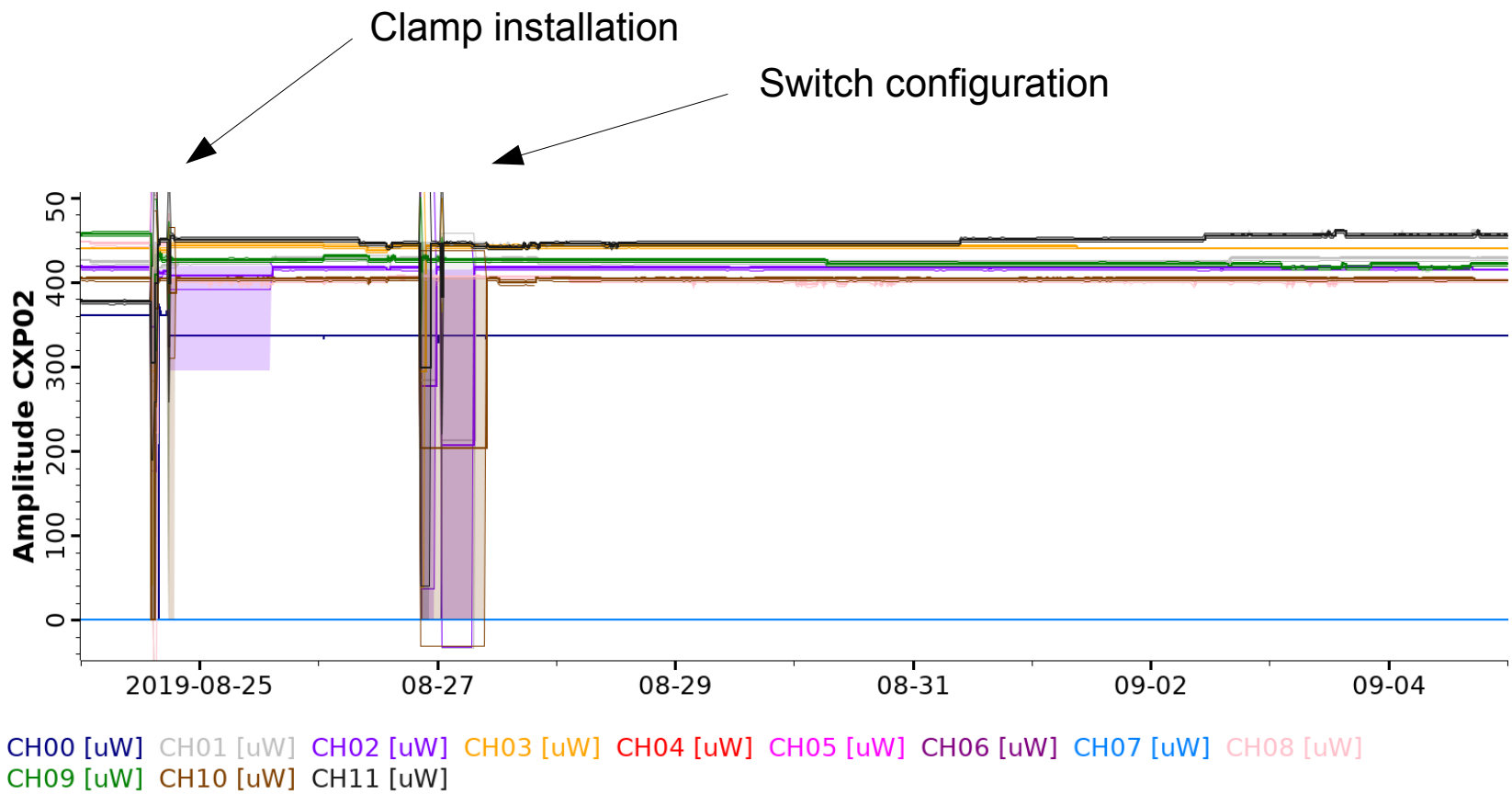

Measurement of the light power DHH 40 / 12ch

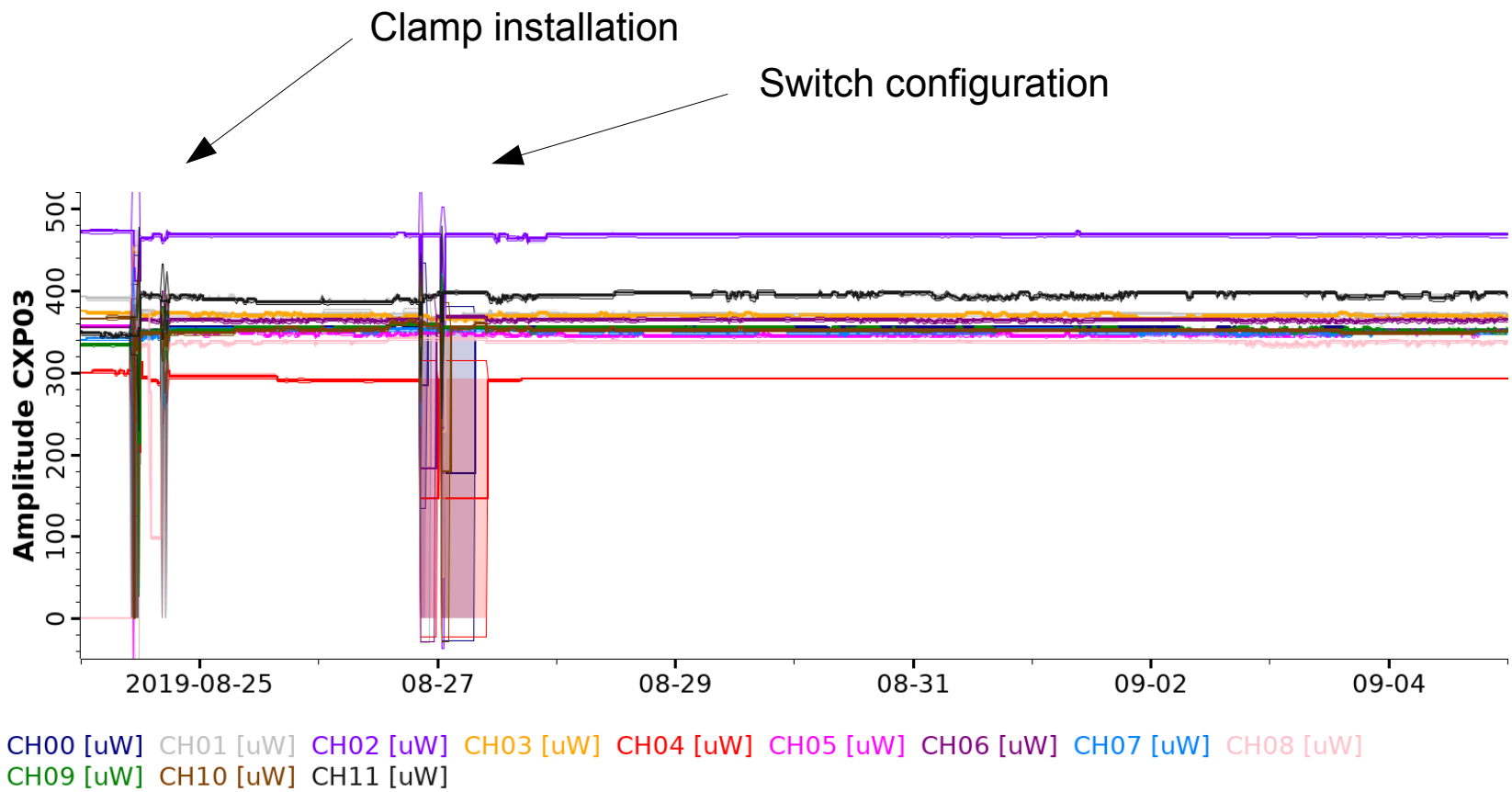

Measurement of the light power DHH 50 / 8ch

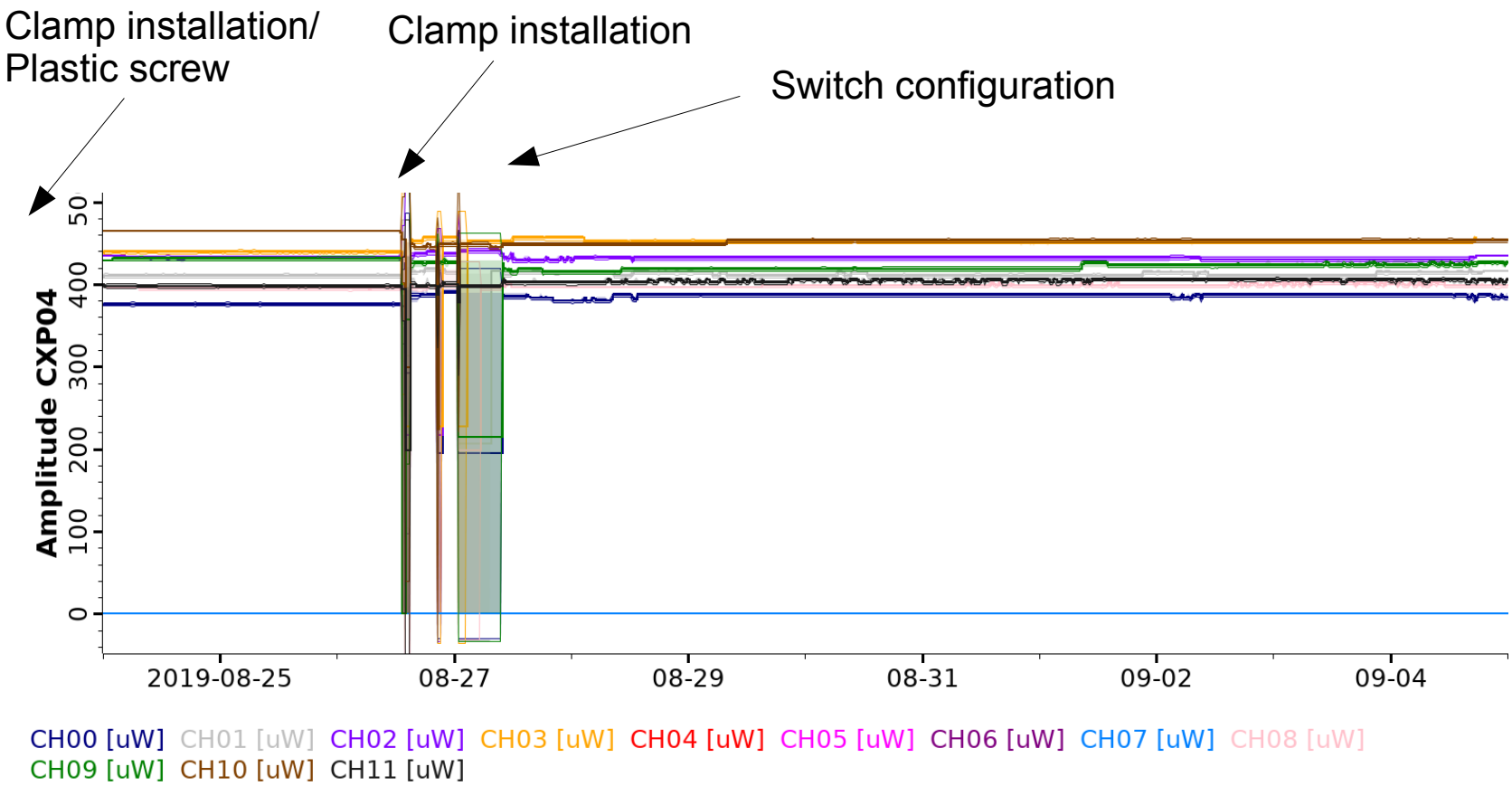

Measurement of the light power DHH 50 / 12ch

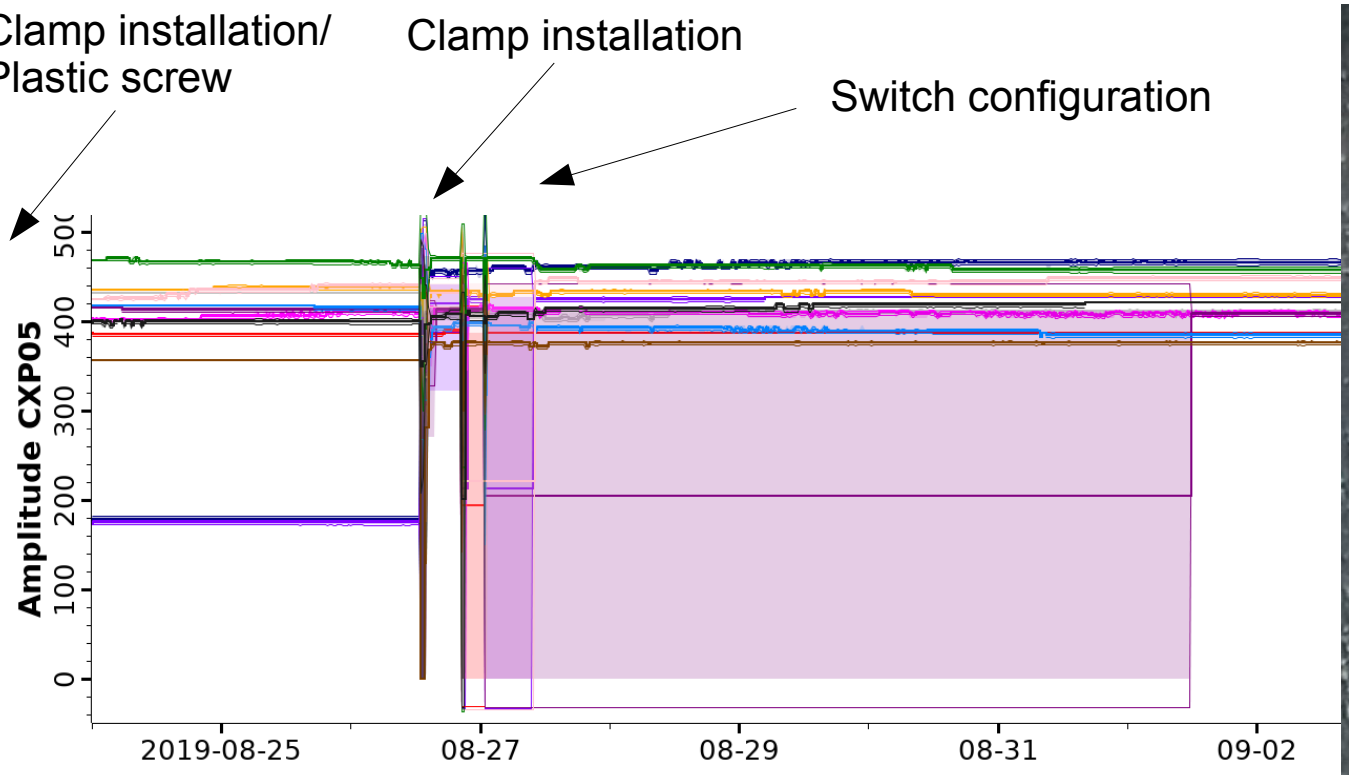

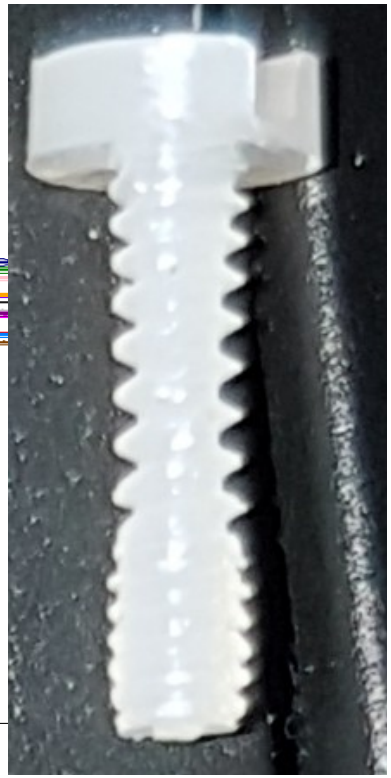

CH00 [uW] CH01 [uW] CH02 [uW] CH03 [uW] CH04 [uW] CH05 [uW] CH06 [uW] CH07 [uW] CH08 [uW]
CH09 [uW] CH10 [uW] CH11 [uW]

Measurement of the light power DHH 60 / 8ch

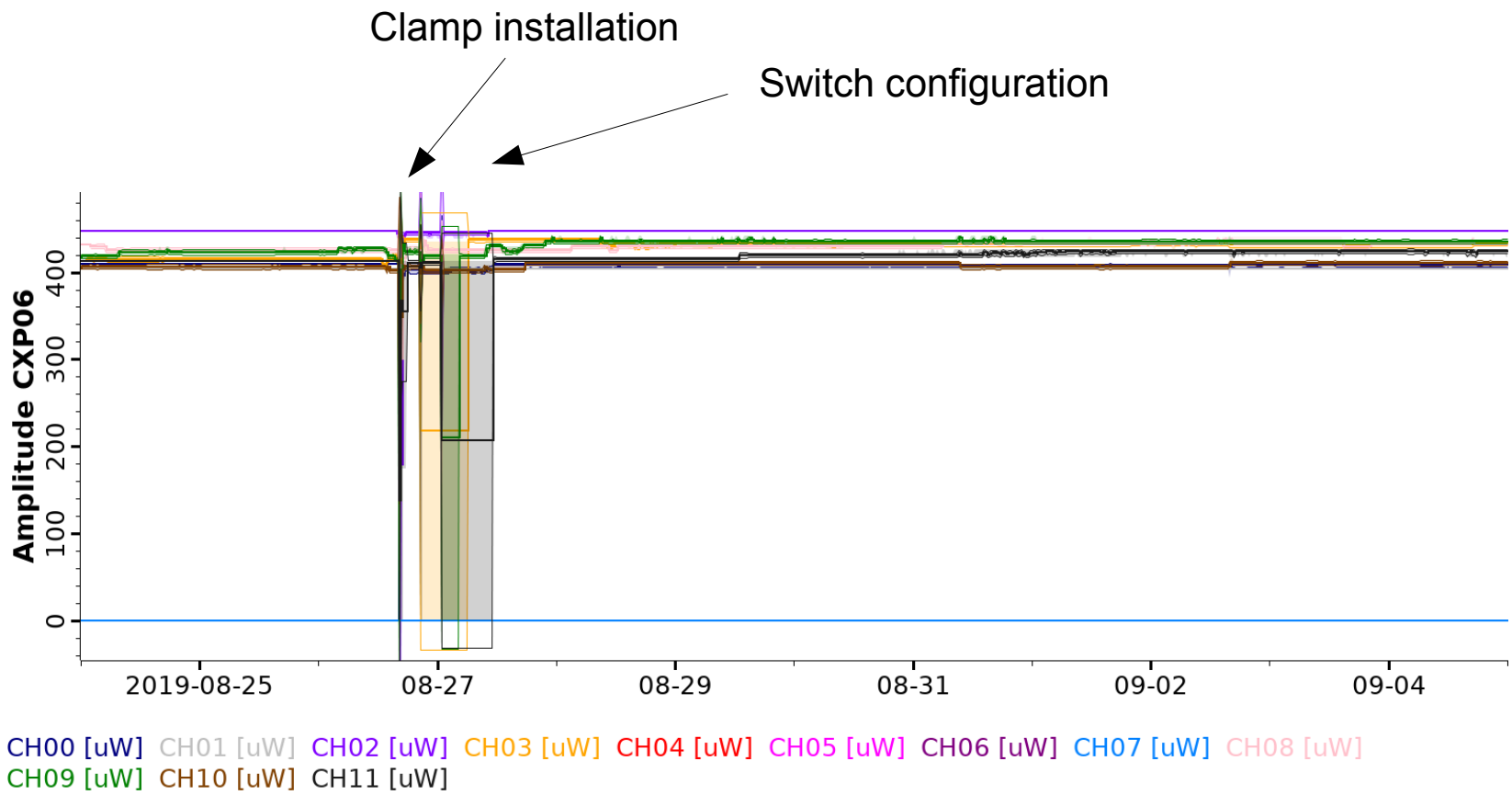

Measurement of the light power DHH 60 / 12ch

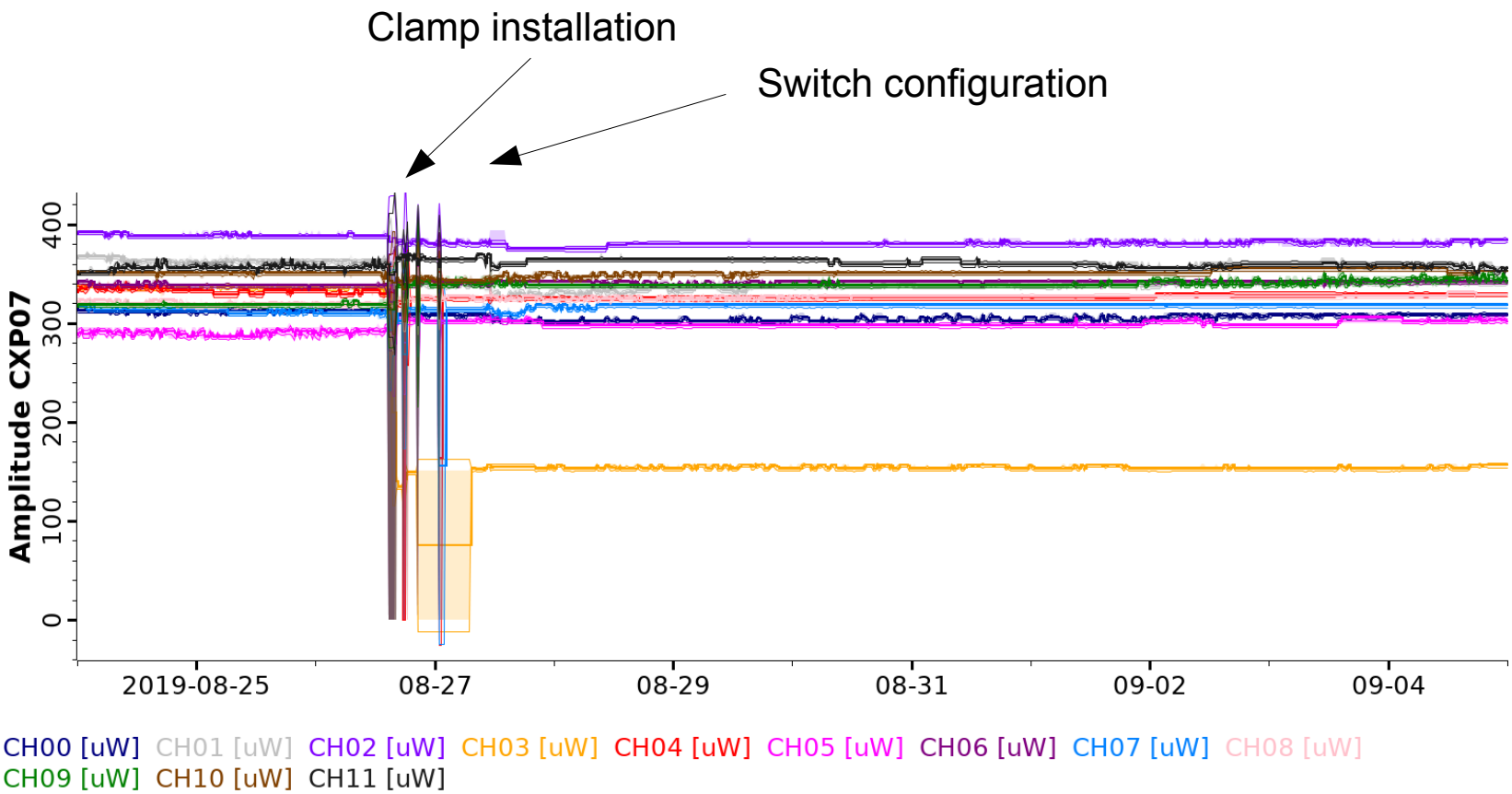

Worst channel while tightening the screw

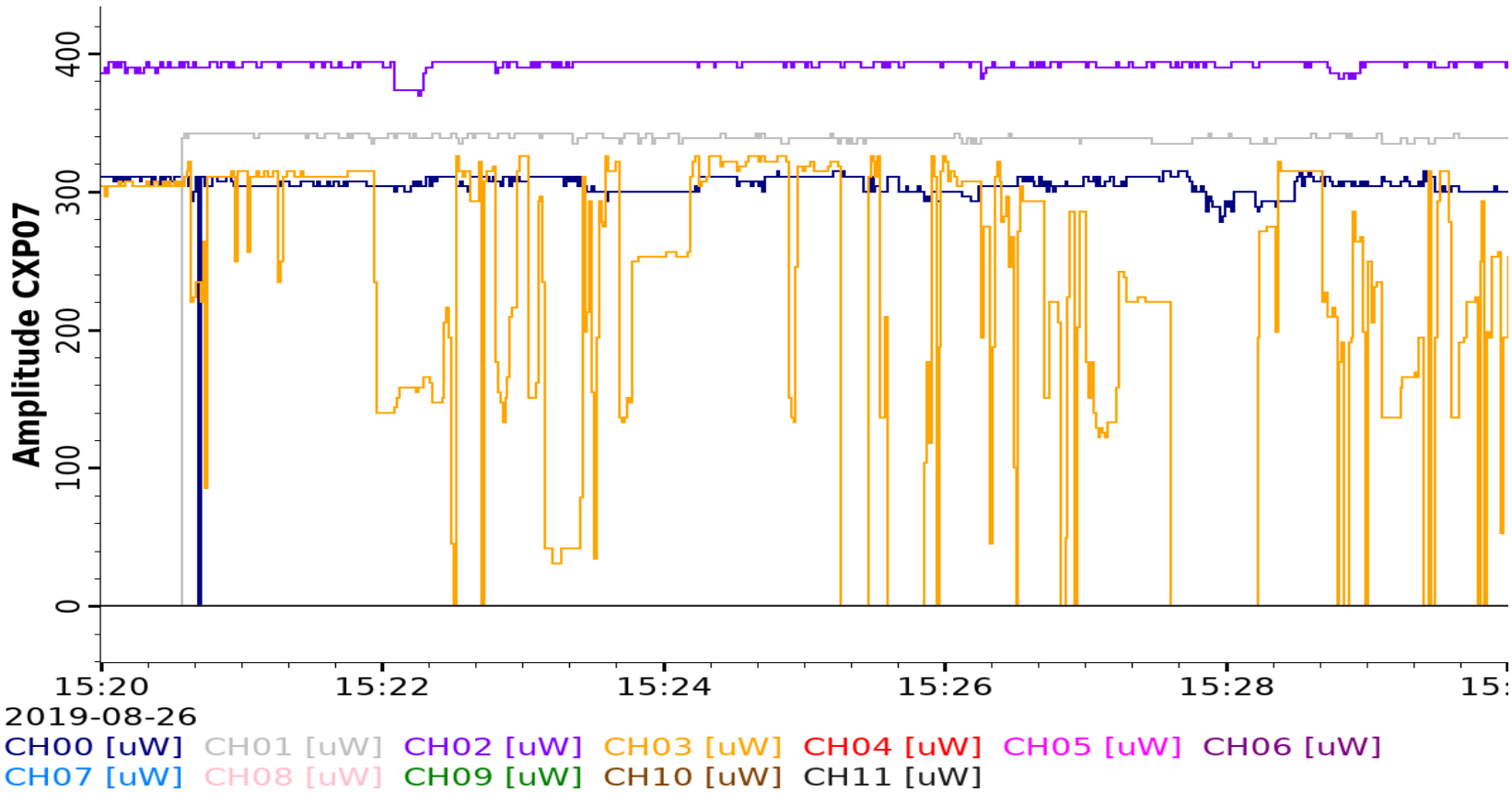

Cross-Point Switch

- IC VSC3144: **144x144** non-blocking cross-point switch
- Up to 6.5 Gbps/port, 1072 BGA
- Analog circuits, no restriction on phase, frequencies, signal pattern
- Programmed on port-by-port basis
  - 1:1 or 1:n connections possible
- Configuration programmed via FPGA over IPBUS
- Common development between COMPASS and Belle II
  - **one spare** in Munich for both experiments

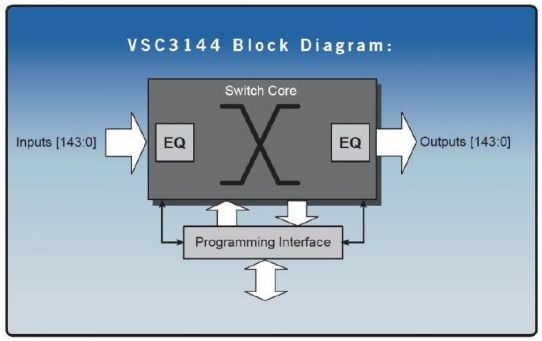

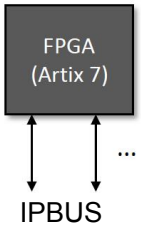

Function of the Cross-point Switch

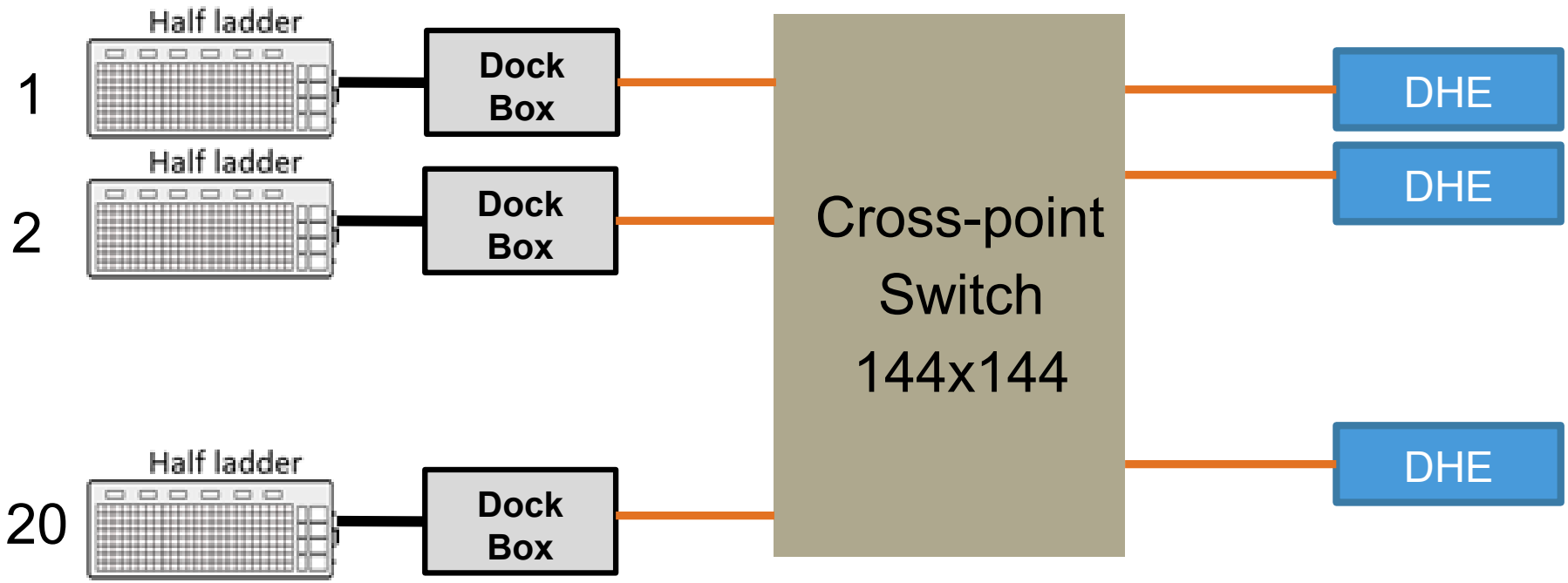

Control Software

- Configuration software
  - GUI for port mapping definition
  - Configuration in DB file (sqlite)

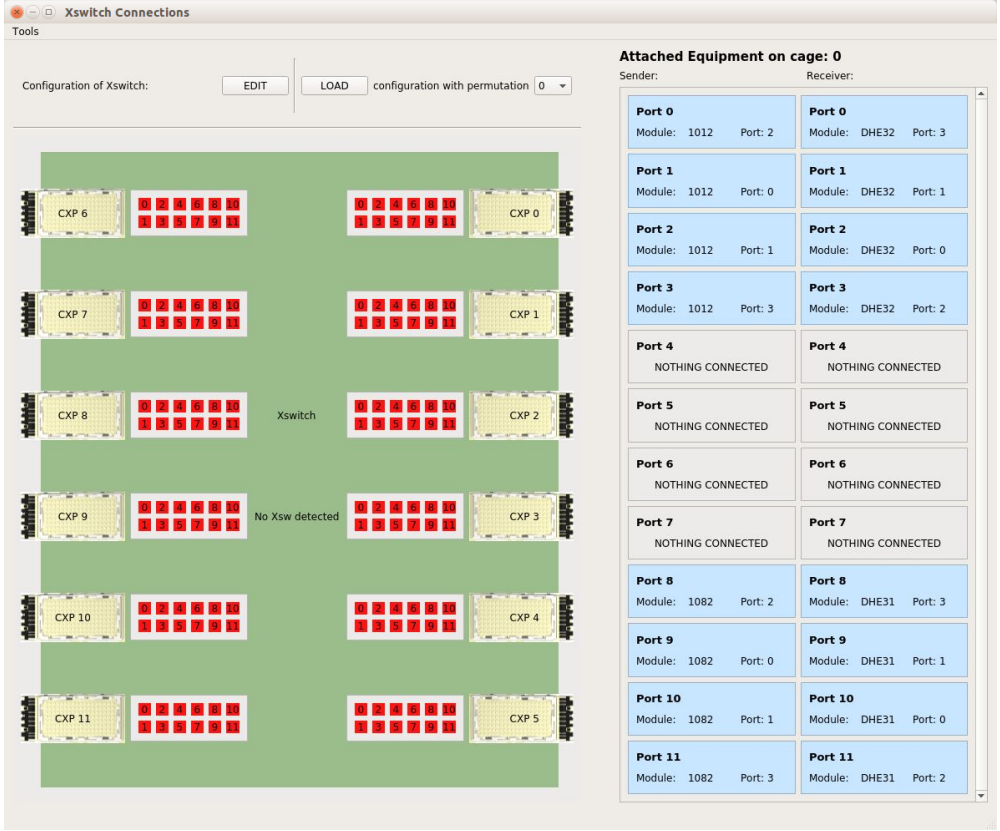

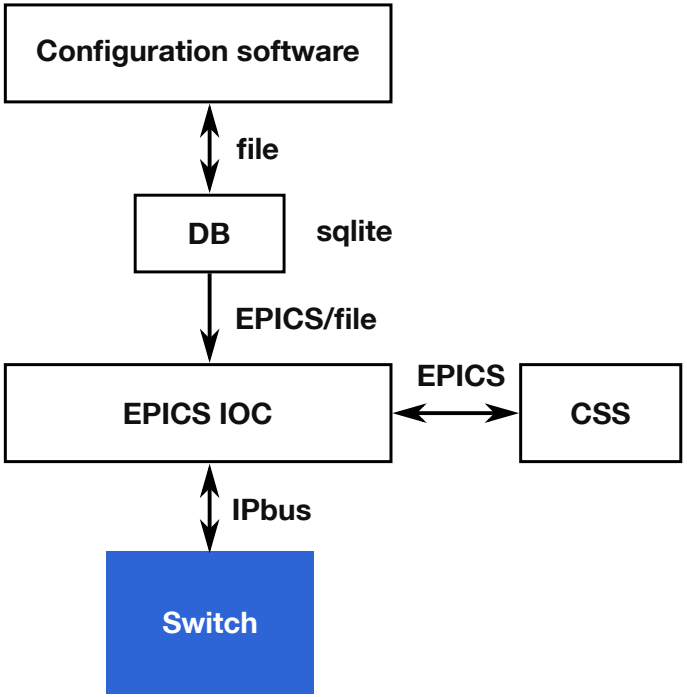

Control Software

- Configuration software
  - GUI for port mapping definition
  - Configuration in DB file (sqlite)

- EPICS IOC
  - reads configuration from DB
    - file
    - EPICS Int8Array PV for configDB integration
  - programming configuration into the switch
  - monitoring of links' state

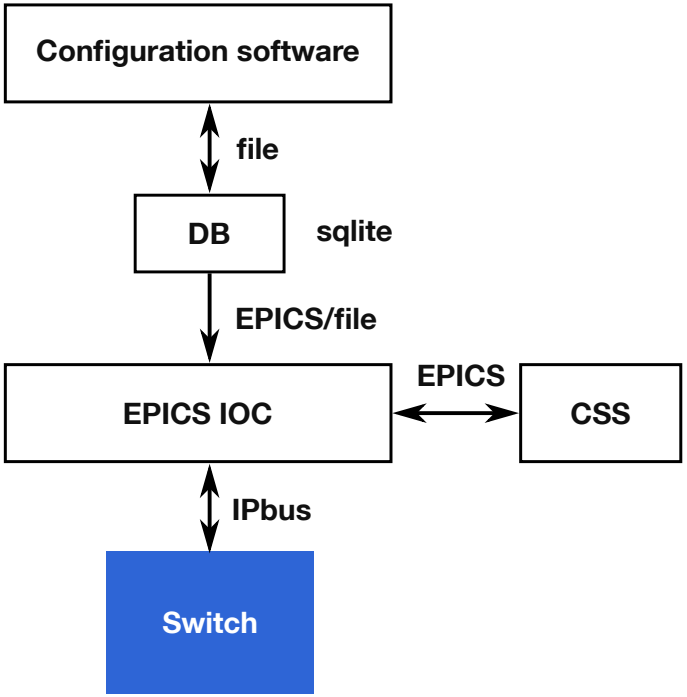

Control Software, CSS OPIs

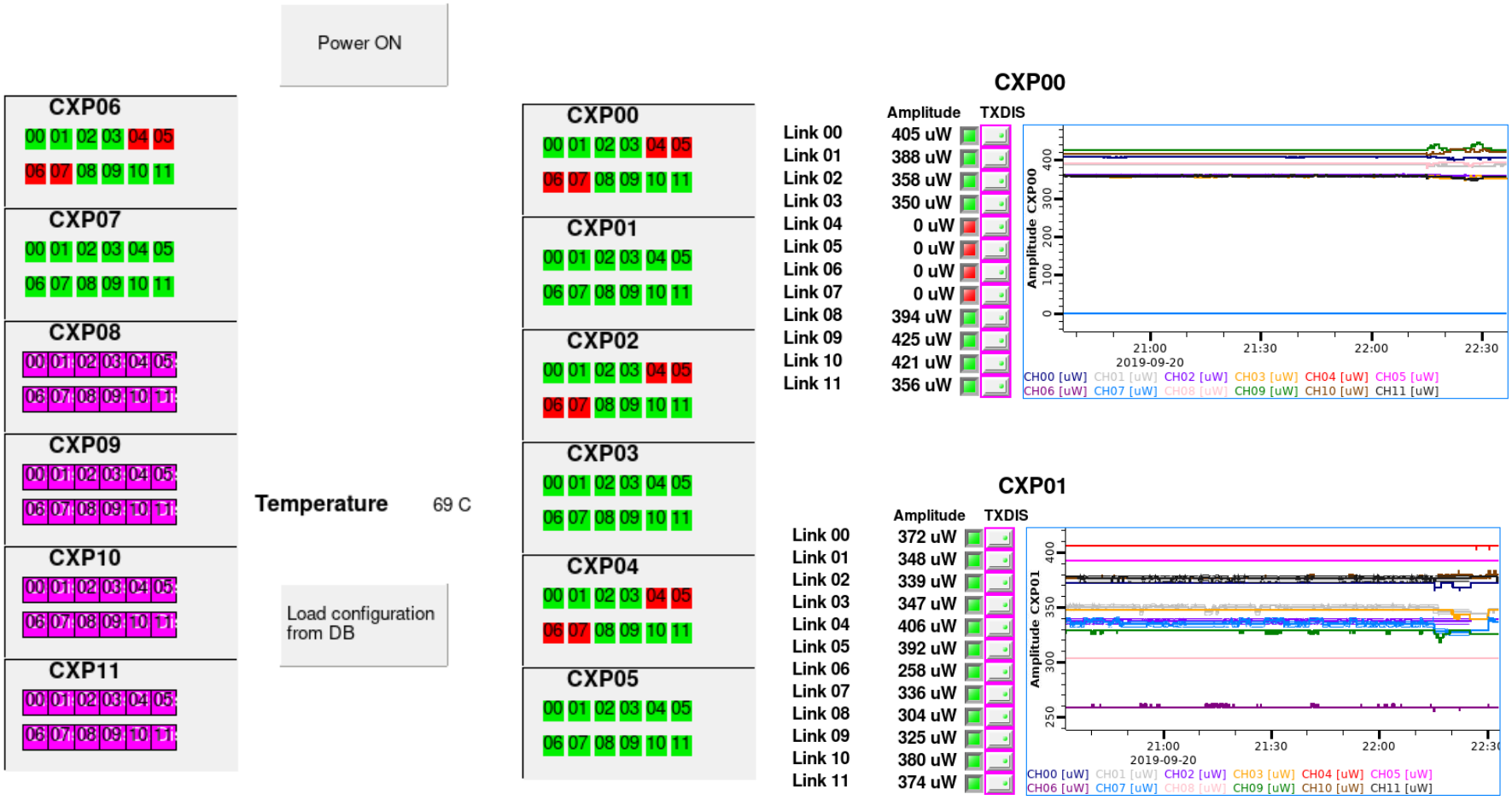

IPMC

- 2 IPMCs installed at KEK
  - power control for **H50 and H60**
  - integrated in EPICS
- 2 IPMCs programmed with wrong firmware
  - new hardware revision
  - recovered by the developers
  - will be installed in October

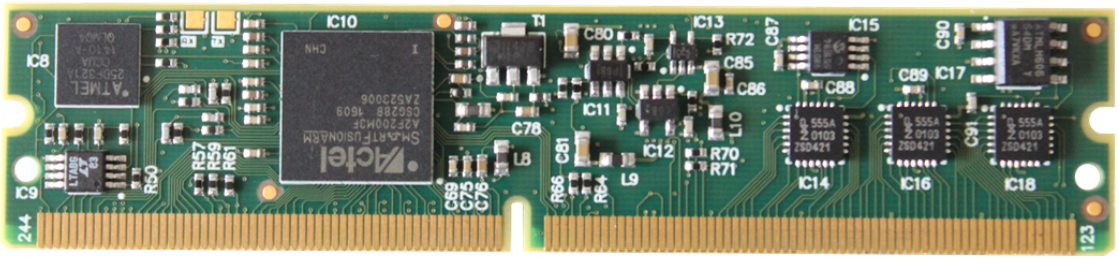

Improvements in the DHH IOC

- Synchronized TCK generation with JTAG commands
  - temperature measurement during pedestal updates
- Bulk read of DHPT memory
  - simplifies verification
  - faster read times: 3 sec/16384 bytes (1 DHPT memory)
- Merged temperature measurement sequence by Harrison

DHI Status

- ☑ DCDC converter patch and new clock monitor
  - 141 glitches in H58 until clock synchronization update (May 26)
  - glitch, frequency out of range, clock stops
  - monitored clocks: UCF clock, local 76 MHz, GCK
- ☒ UCF synchronization **not always successful**
  - known problem
  - avoid "GTX reset"
  - workaround: reloading DHI firmware
  - under investigation

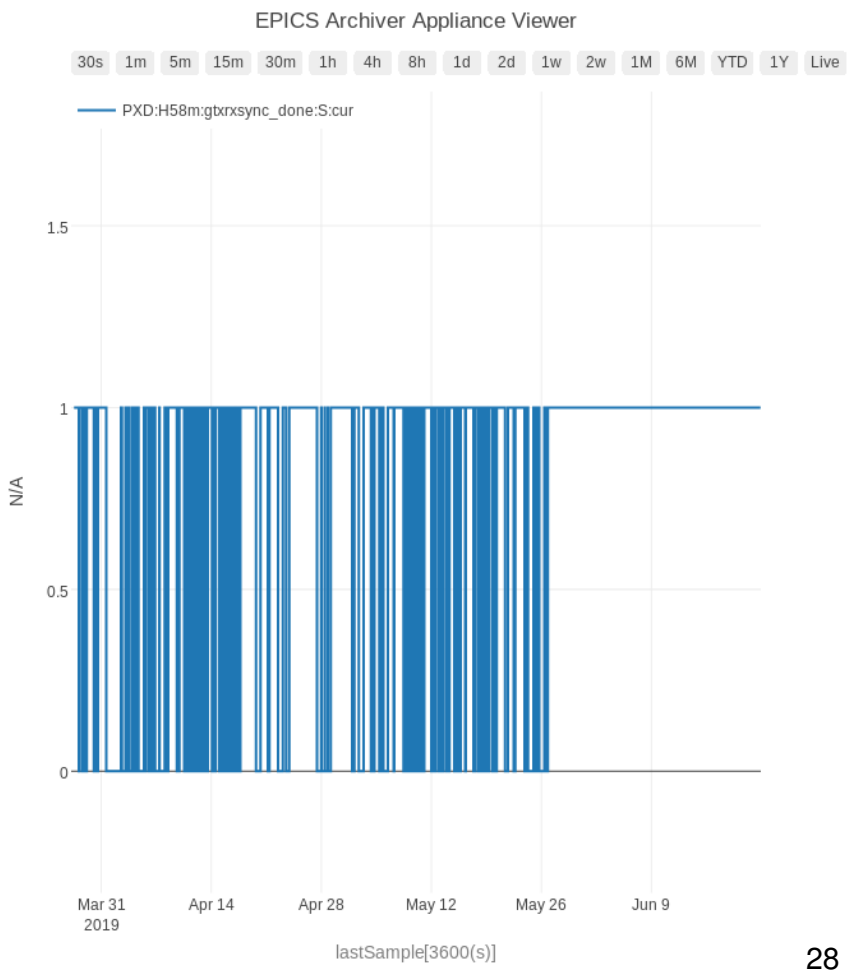

DHI Power Patch

Clock glitch problem

- Glitch source is clock cleaner cheap Si3558
- Origin of the glitch is propagation of DC/DC switching noise to 2.5V power line through

Patch

- Linear voltage regulator 3.3V=>2.5V

One DHI with clock problems was modified and tested.
No problems were observed during 24H test

All DHIs at TUM will be modified and shipped to KEK for tests.

DHH Overview

KEK :

- 4 DHH systems deployed
- 3 DHH systems partially equipped, missing 3 DHI, 1 DHE module and 1 DHRTM

DESY :

- 1 DHH system deployed

TUM :

- 1 DHH test system
- 2-4 spare DHE modules
- 1 spare DHI + 3 DHI to be repaired
- 1 spare DHRTM + 3 DHRTM without optical receivers
- 2 DHCC to be tested + 1 DHCC to be assembled and tested

Summary

9 fully working DHH systems, 8 + 1 Spare

Partially or fully assembled modules

- 3 DHCC
- 2 DHI + 1 to be repaired
- 3 DHRTM without optical receivers
- 1-3 DHE/DHC modules
  - Many DHE modules broke during detector and system tests
  - TUM produced 15 more DHE modules in 2018
  - By now we accumulated about 20 broken modules
  - Additionally 4 modules have broken HS links connected to Infiniband connectors

Proposal

Minimum scenario is to complete 3 DHH systems + spare crosspoint switch:

9(8+1) DHH at KEK + 1 DHH at DESY + 1 DHH at MPP + 1 DHH at TUM

Cost estimation :

- 18 DHE modules + 2 spare => 24 kEuro
- 1 Crosspoint switch => 5 kEuro

Total 29 kEuros

Available funding : 15kEuro BMBF + 5kEuro common fund

Summary

- Load balancing DHC firmware successfully tested
- Cross-point switch installed at KEK
  - re-ordering of DHEs for ROI selection
  - monitoring of optical DHPT links
- Plastic clamps installed to fix optical fibers in the dock box
- New monitoring capabilities in the DHI
- Improvements in DHPT memory reading and in temperature measurements