Lawrence Livermore National Laboratory

LLNL Update

Tom Piggott, Jeff Gronberg, Jay Javedani, Ryan Abbott,
Charles Brown, Lisle Hagler

Lawrence Livermore National Laboratory, P. O. Box 808, Livermore, CA 94551

This work performed under the auspices of the U.S. Department of Energy by Lawrence Livermore National Laboratory under Contract DE-AC52-07NA27344

LLNL-PRES-440614

Ongoing work at LLNL

- Flux concentrator
  - Design study
  - Planning for experiment
- Rotating vacuum seals
  - Design study
  - Planning for experiment

Coils with no magnetic shaping plates

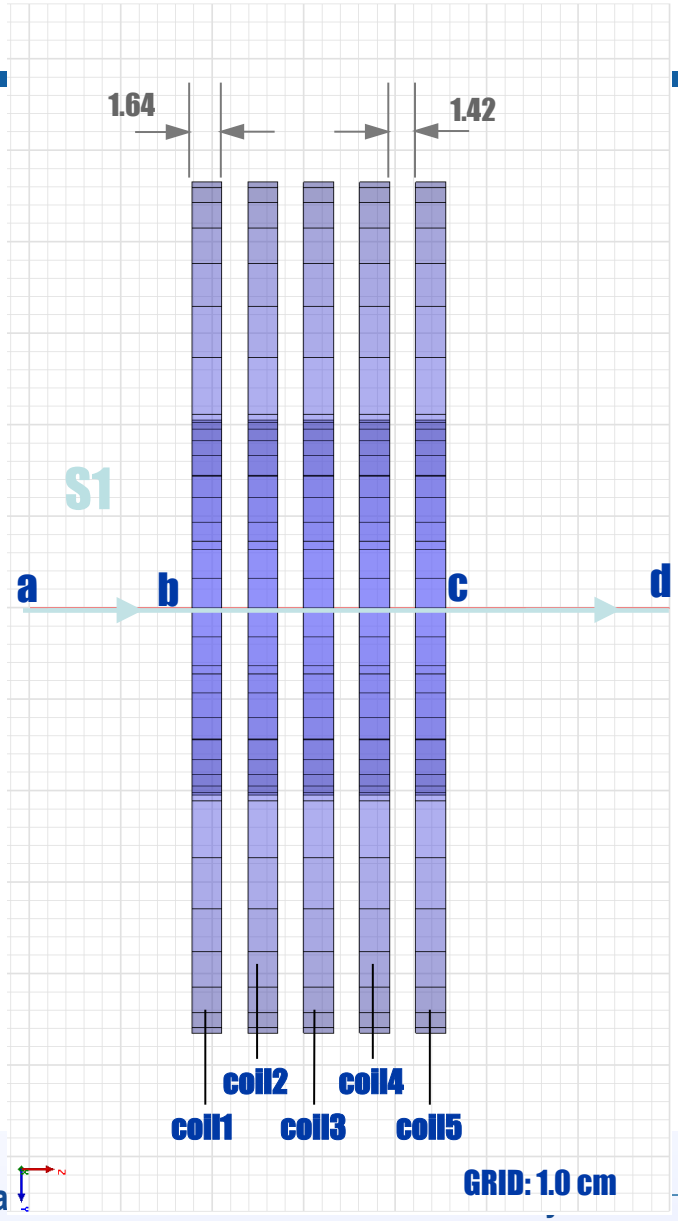

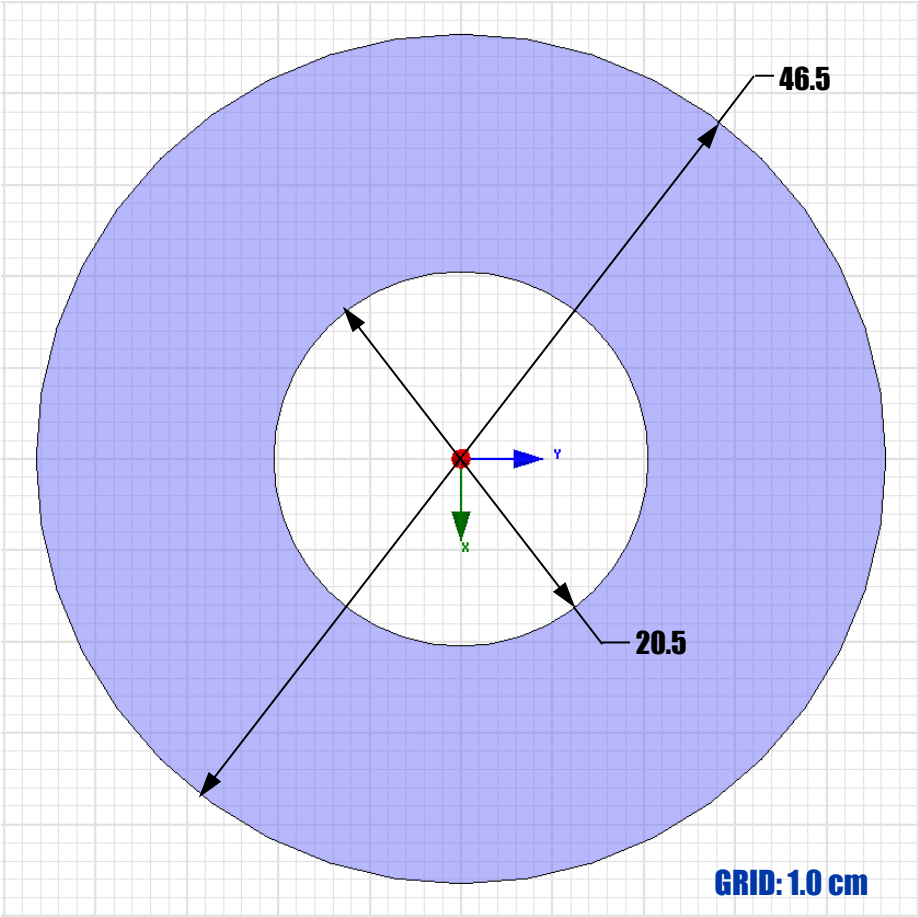

To generate the right field (see Appendix) the magnitude of the current injected in coils are set different.

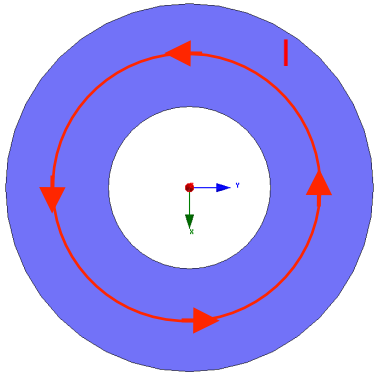

Coil material: OFHC Copper σ = 3.5714E+08 s/m

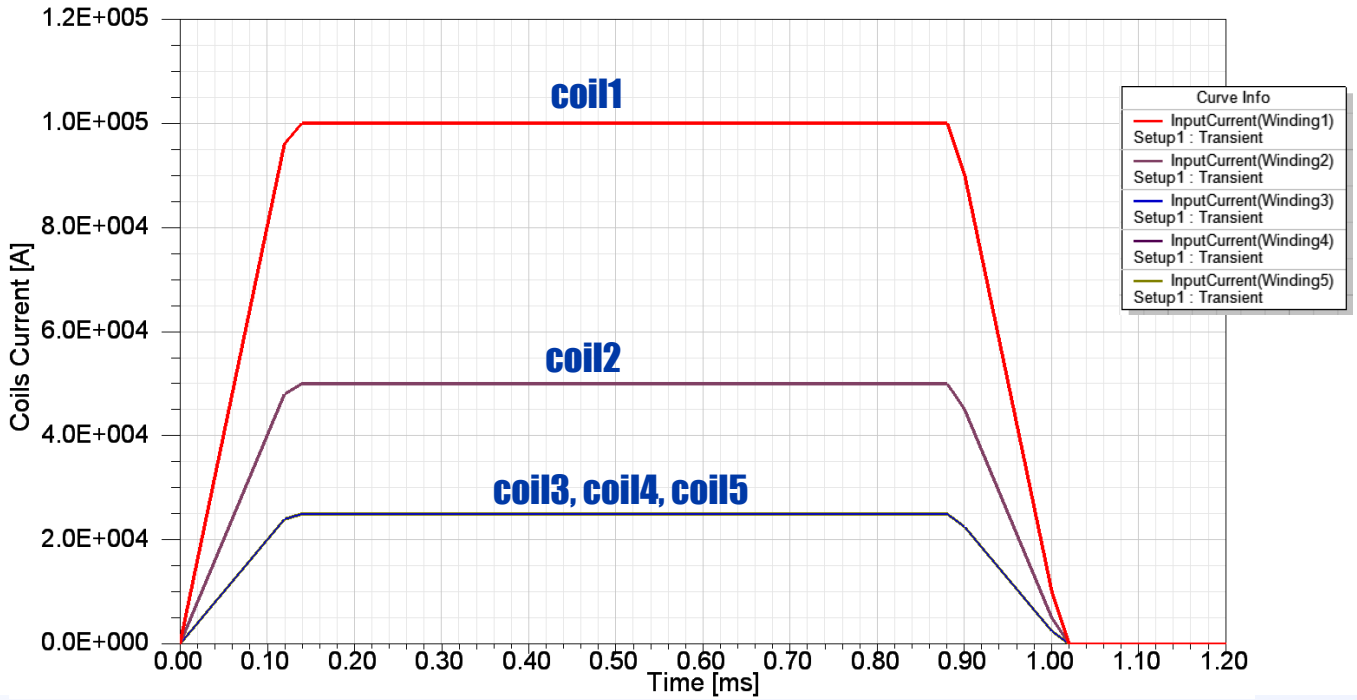

|B| in yz plane at 0.5 ms (Coils-Only Case)

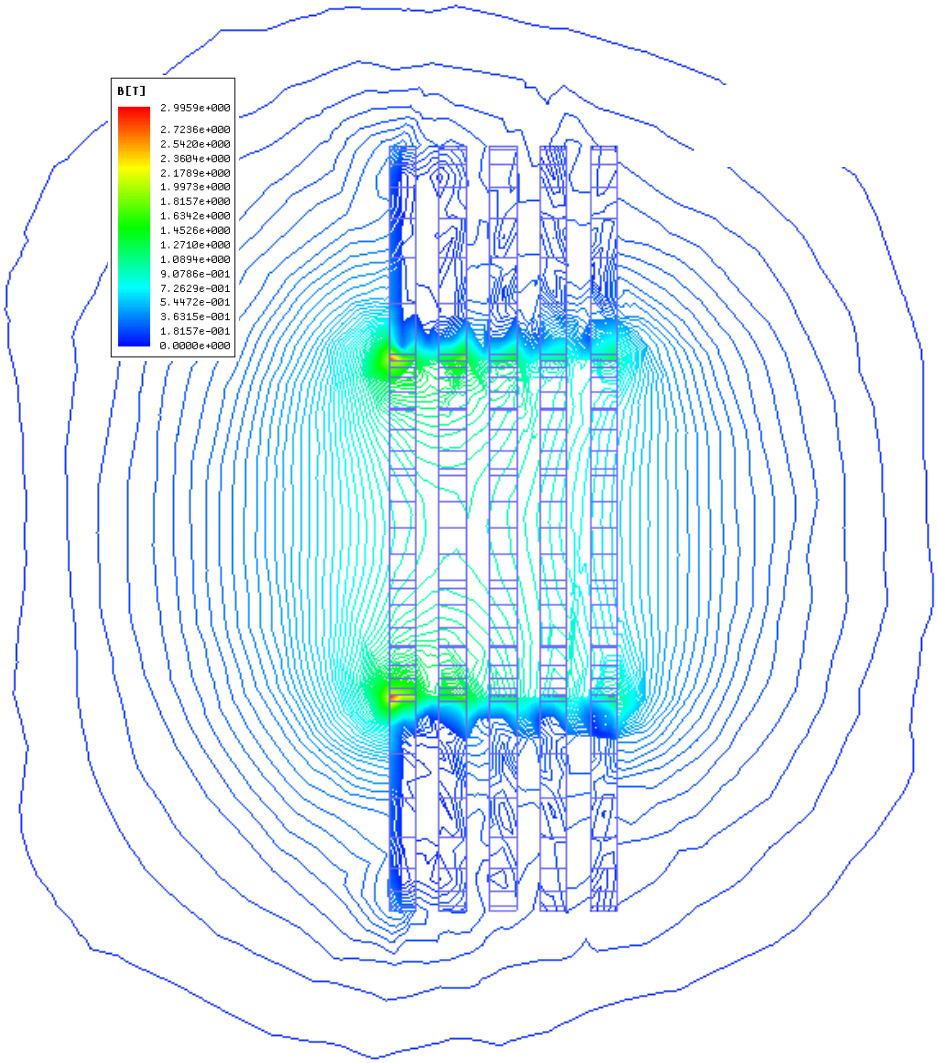

|J| in yz plane at 0.5 ms (Coils-Only Case)

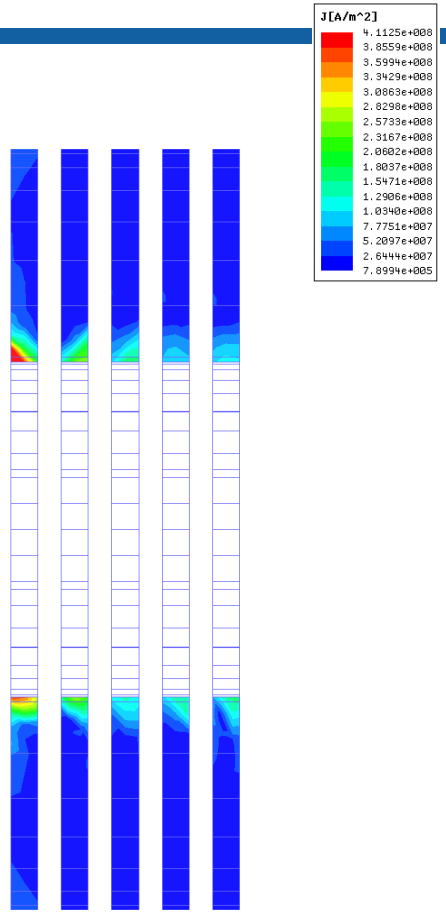

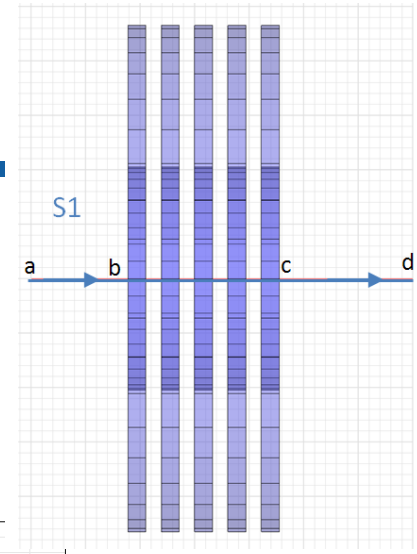

|B| along S1 for the case of Coils-Only at t = 0.5 ms

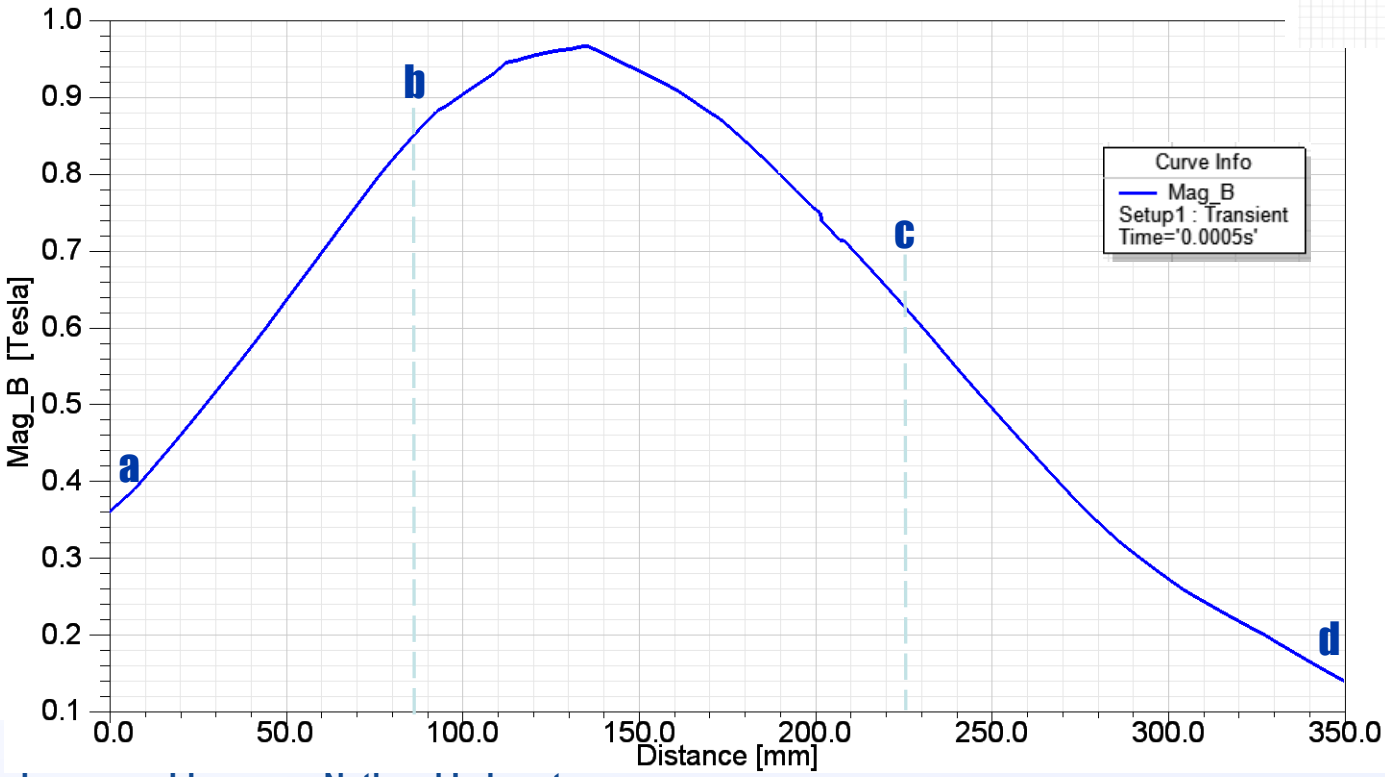

Forces in z direction on each coil for the case of Coils-Only.

At t = 0.50 ms:

$$\sum F_z = 18.6 - 5.5 - 3.5 - 3.8 - 5.5 = 0.3$$

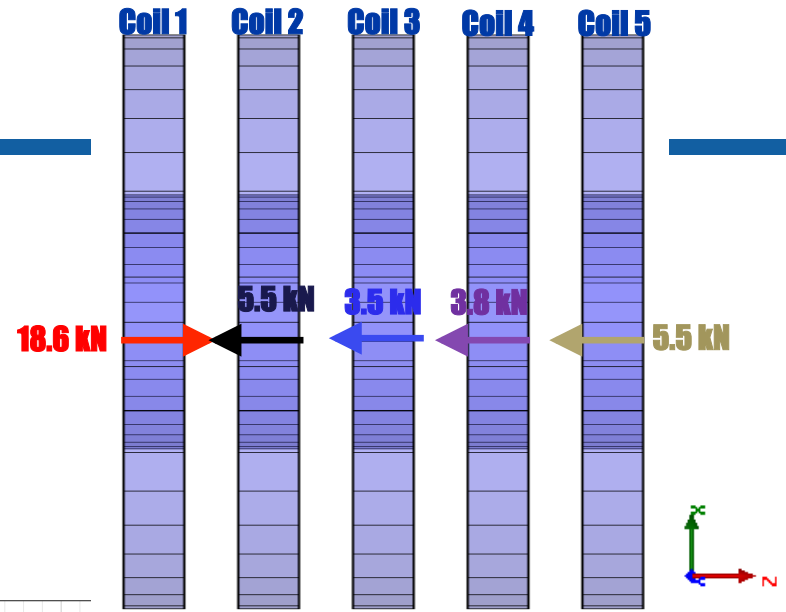

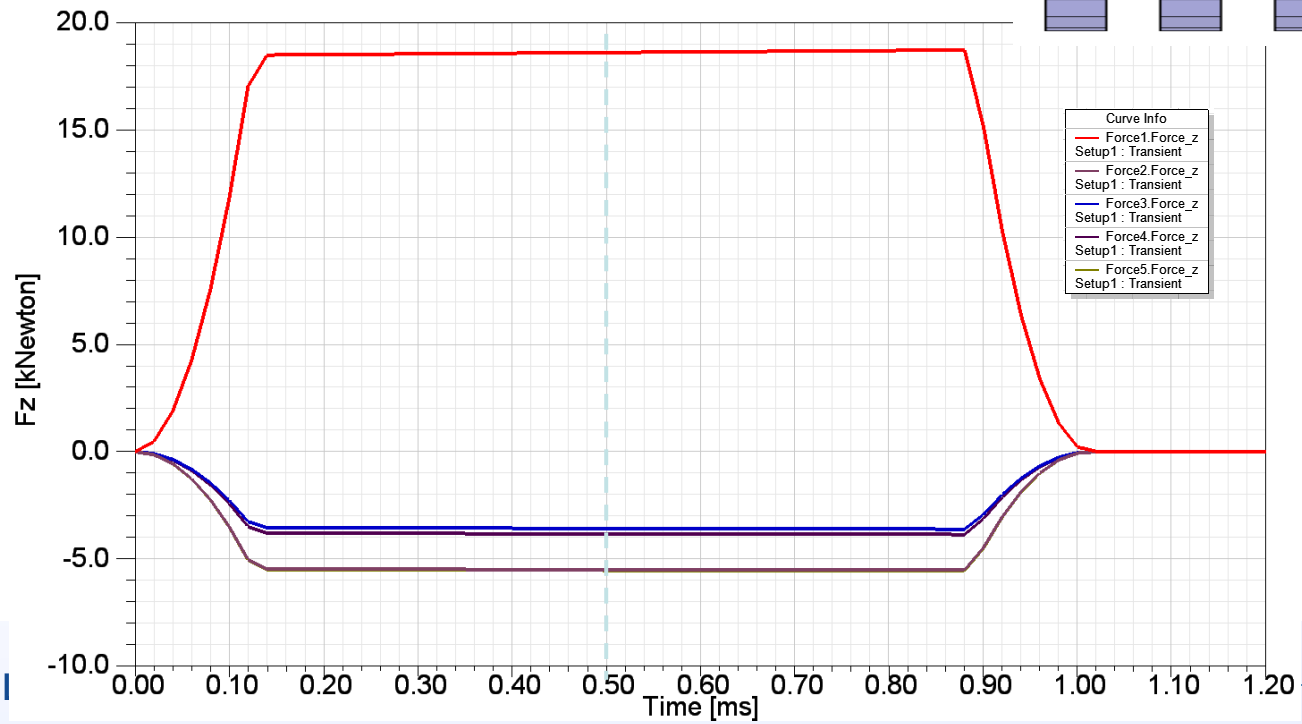

Coils with magnetic shaping plates (Modified Brechna's Configuration)

- Each plate has a 0.2 cm slit that is out of phase by 60° from the neighboring plates

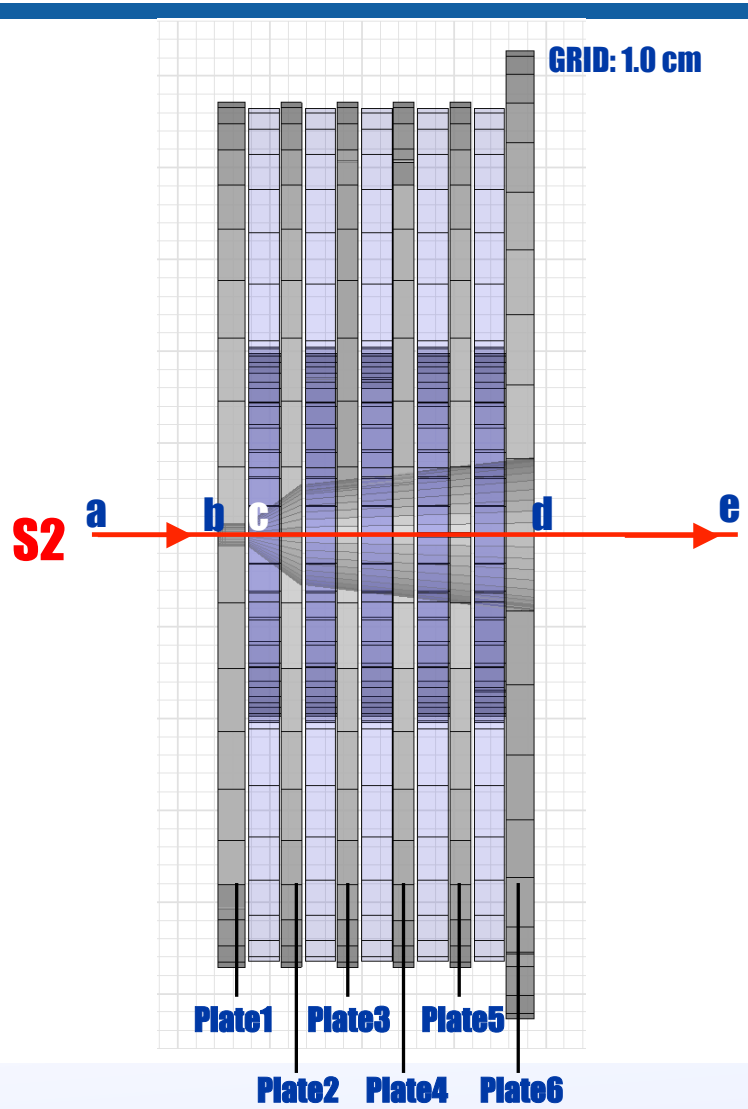

To generate the right field (see Appendix) the magnitude of the current injected in coils are set different.

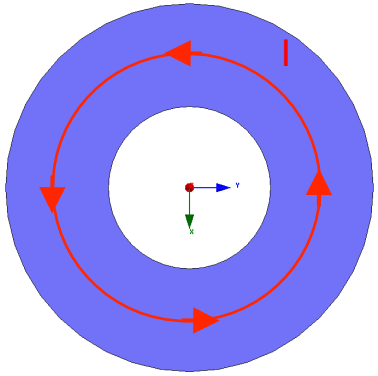

Coil material: OFHC Copper σ = 3.5714E+08 s/m

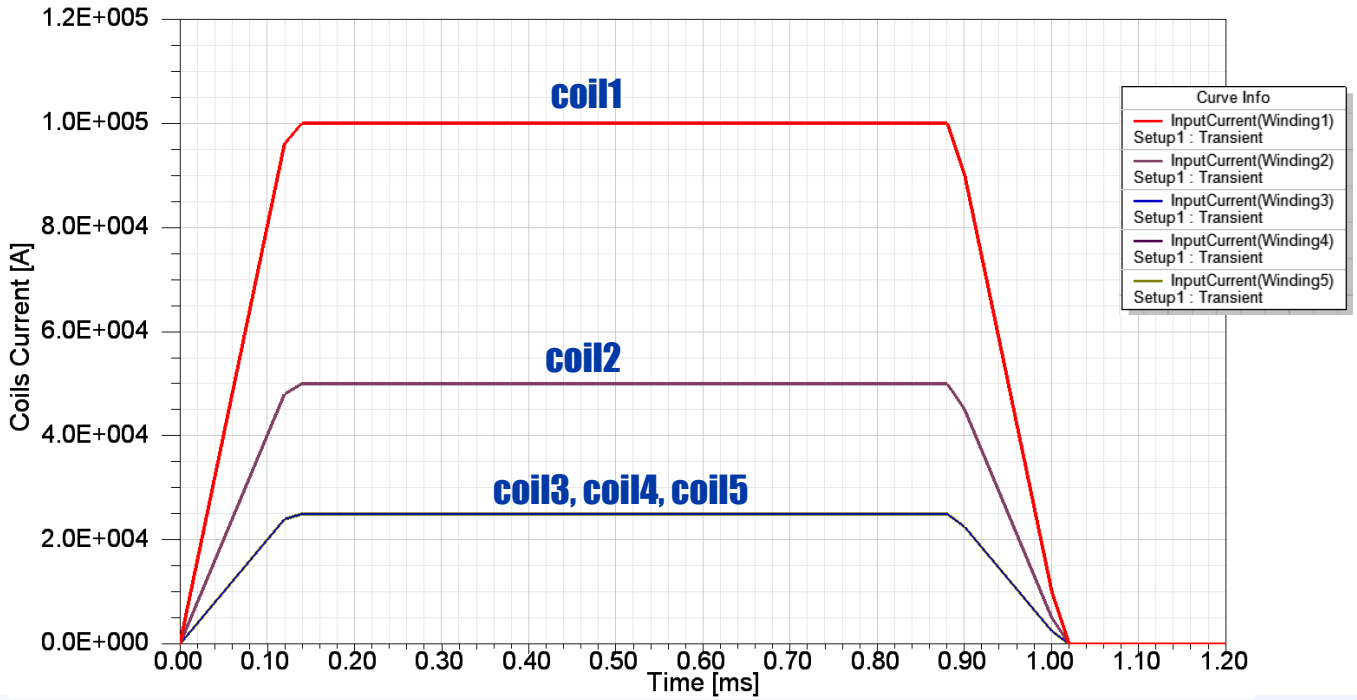

Magnetic Shaping Plates with 0.2 cm Slits in the xy plane

- Note slit orientation in each plate, 1) moves counter-clock-wise and 2) in 60 degrees in each plate neighboring plate.

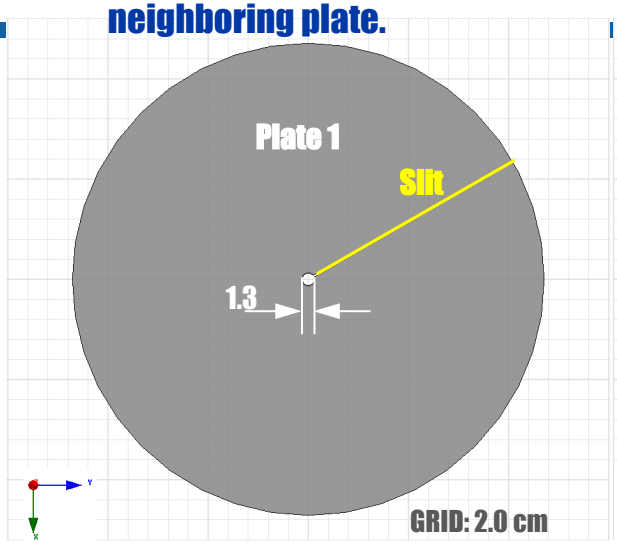

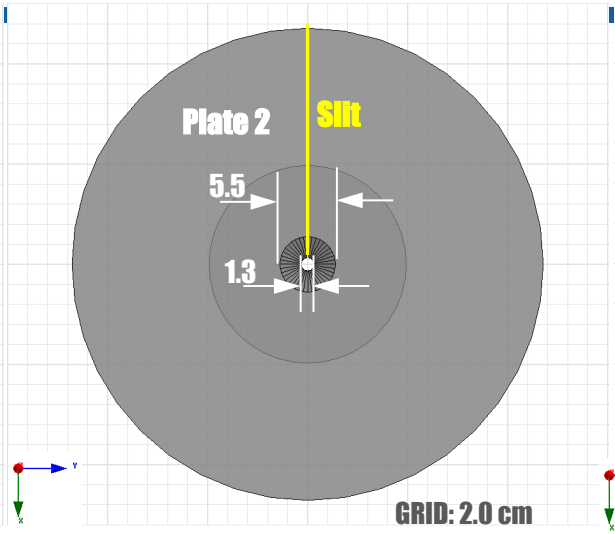

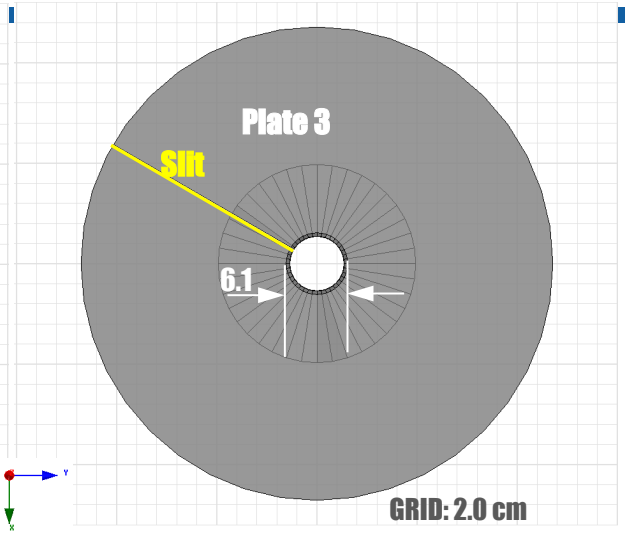

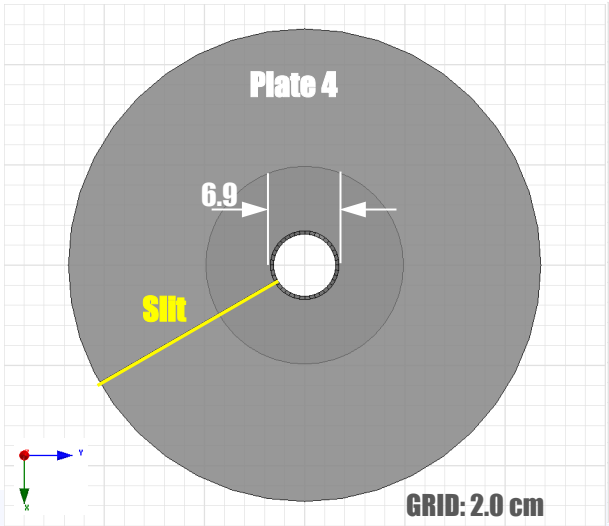

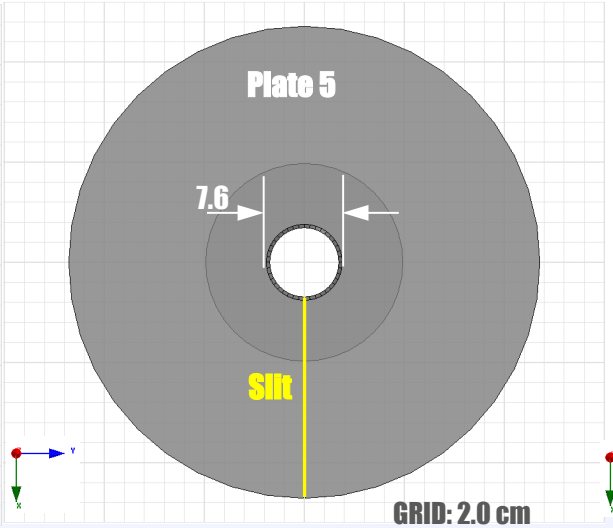

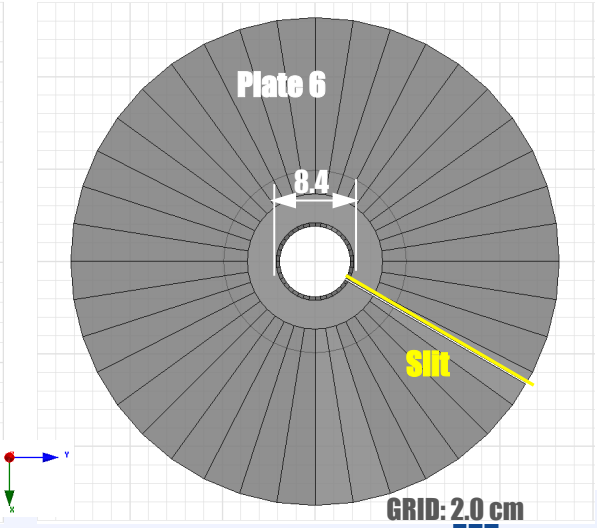

Magnetic Shaping Plates in the xzplane [Dimensions in "cm"]

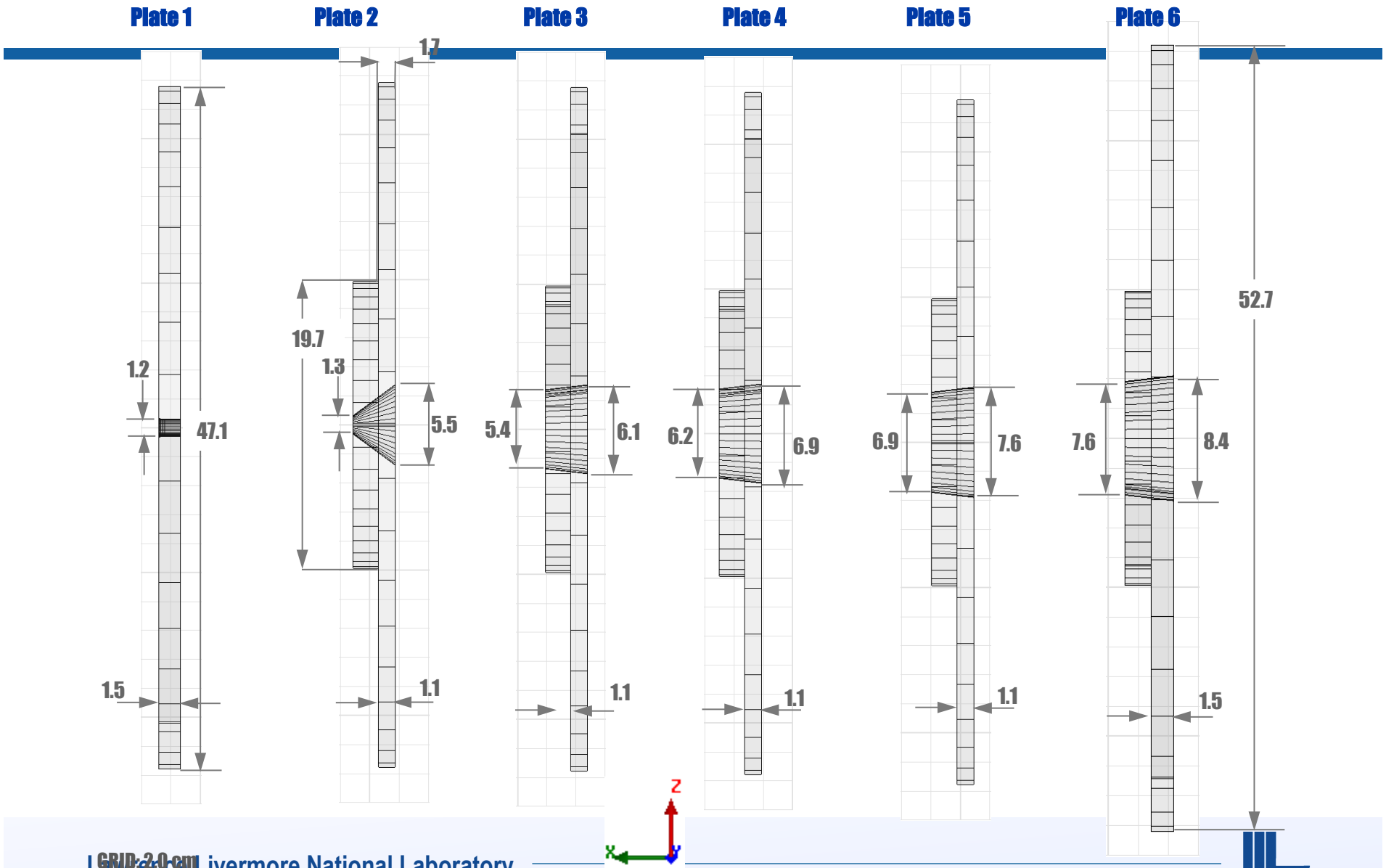

|B| in yz plane at 0.5 ms

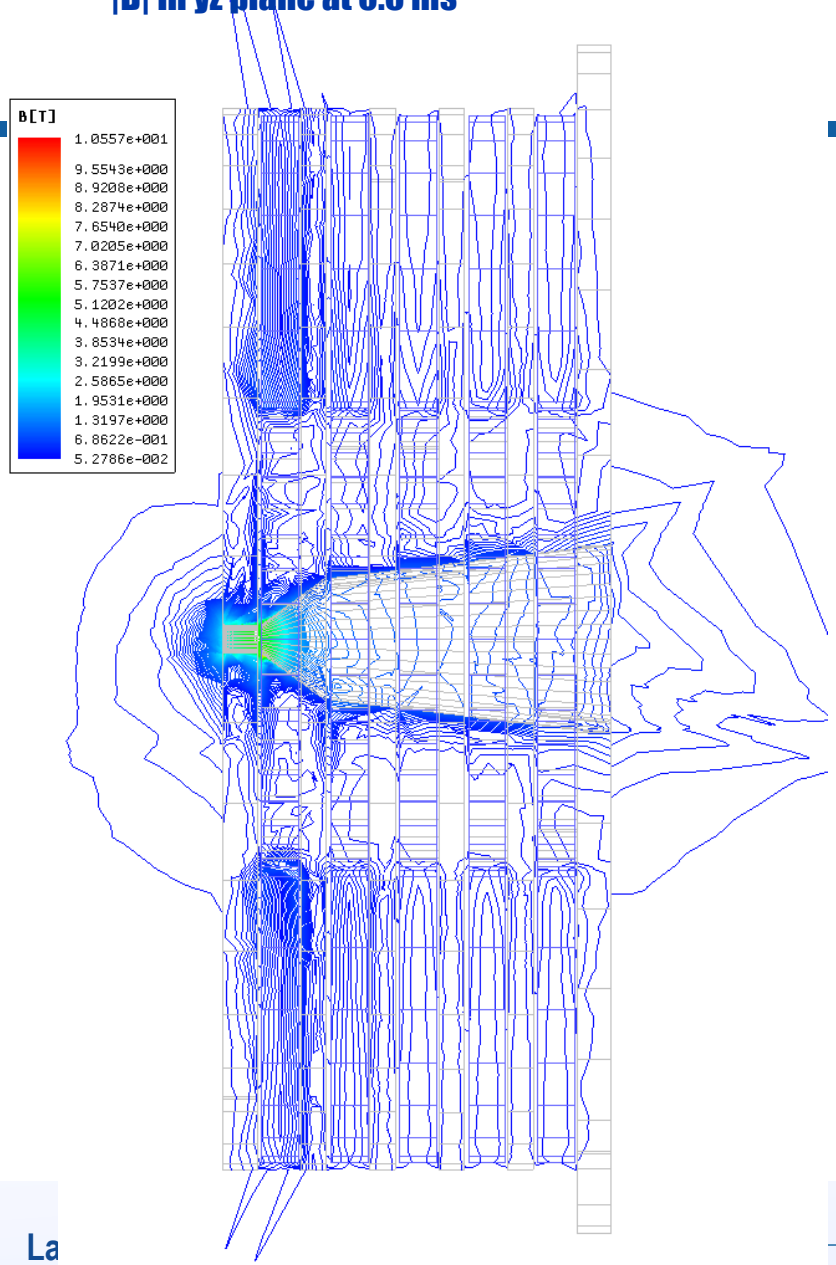

|J| in yz plane at 0.5 ms

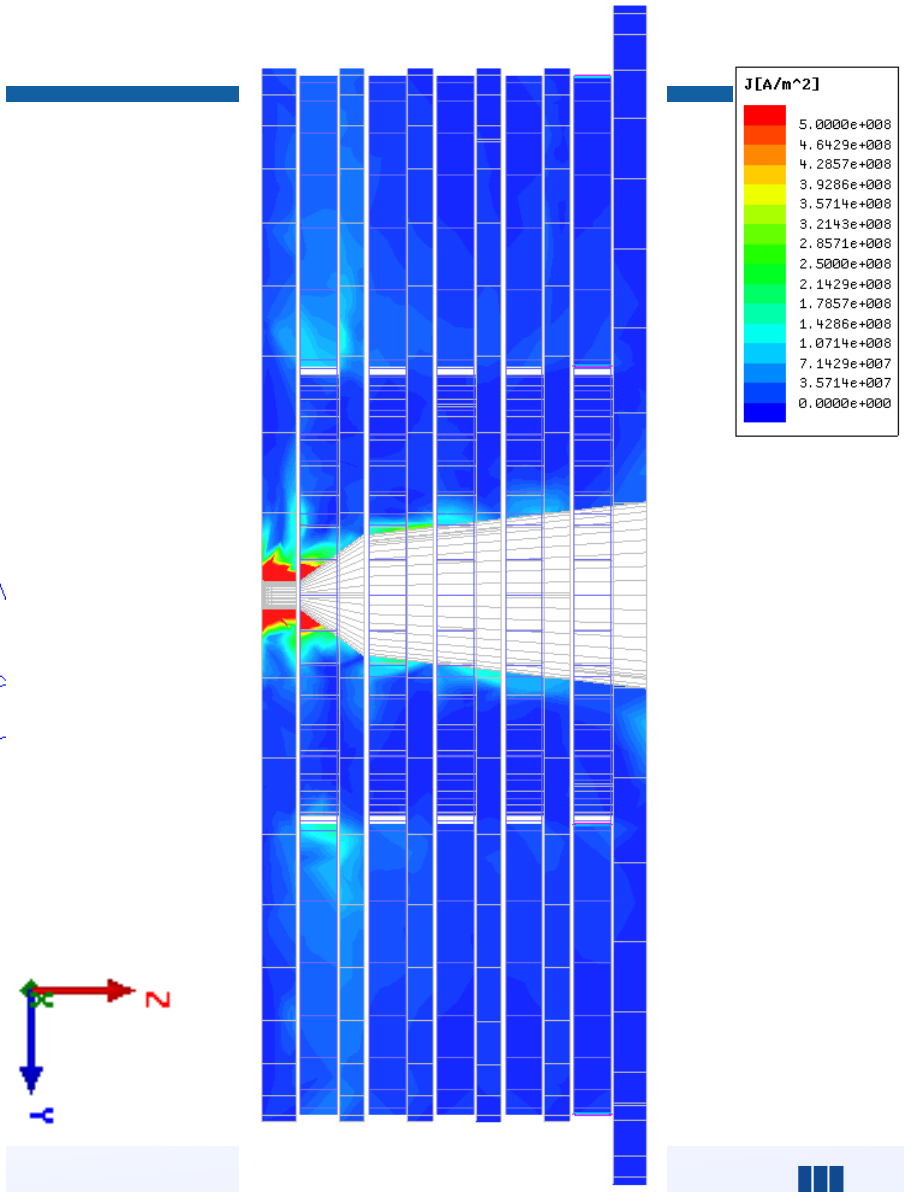

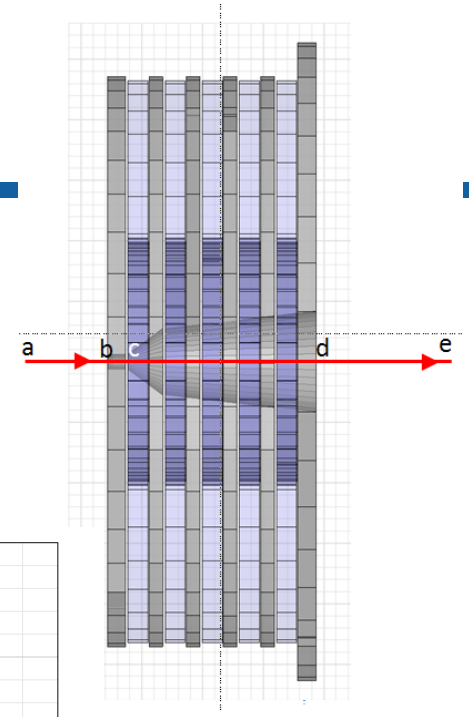

|B| along S2 for the case of with Shaping Plates at various times

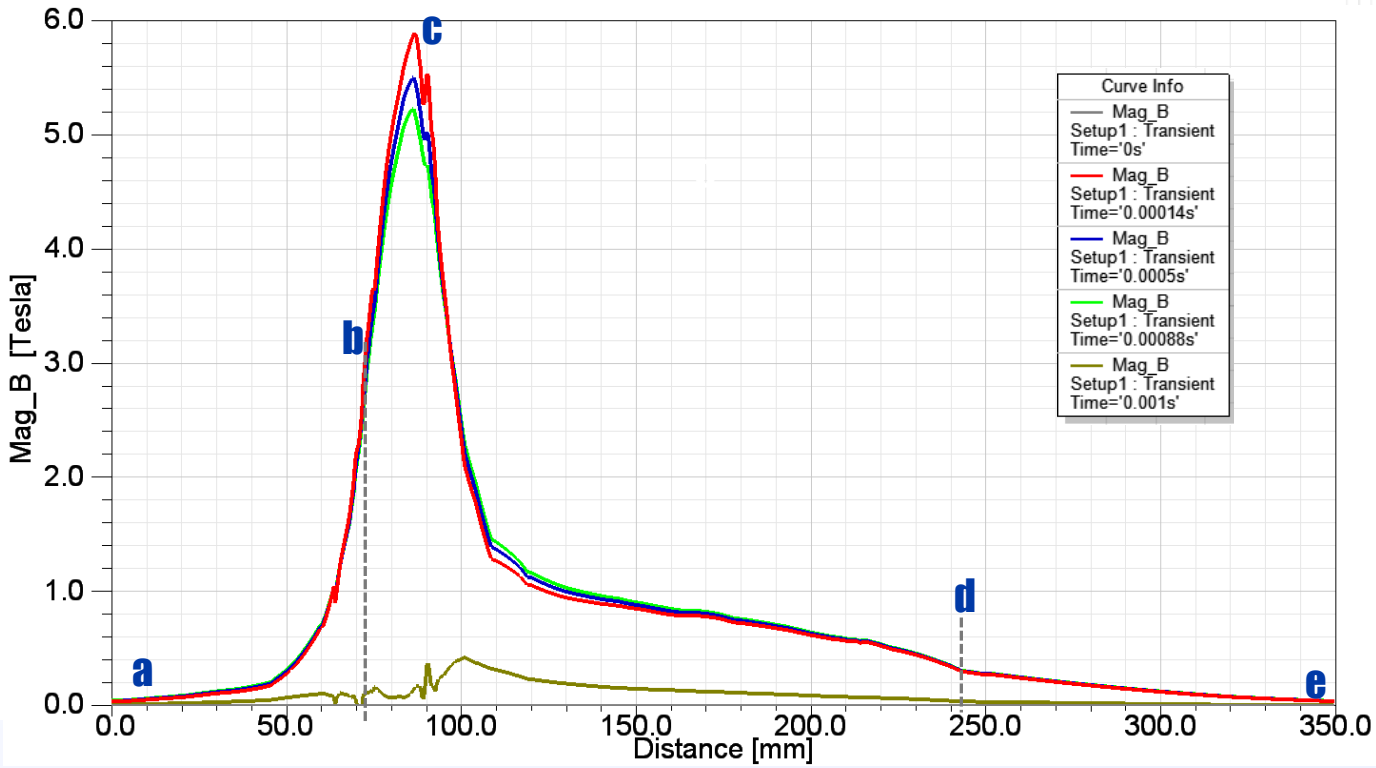

Fz among the Coils as a function of time

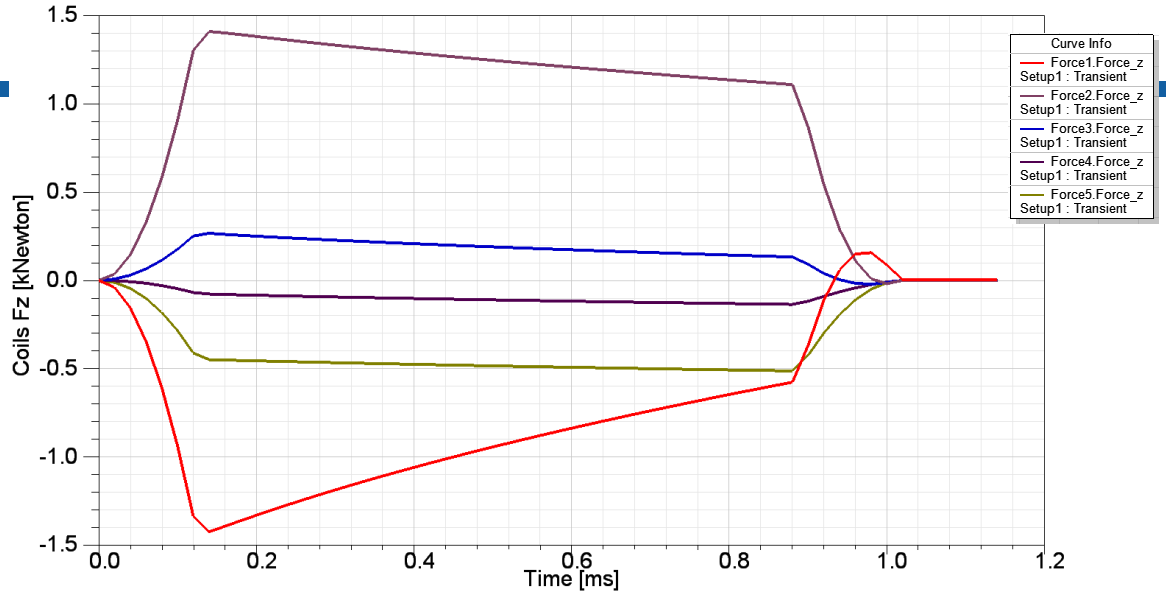

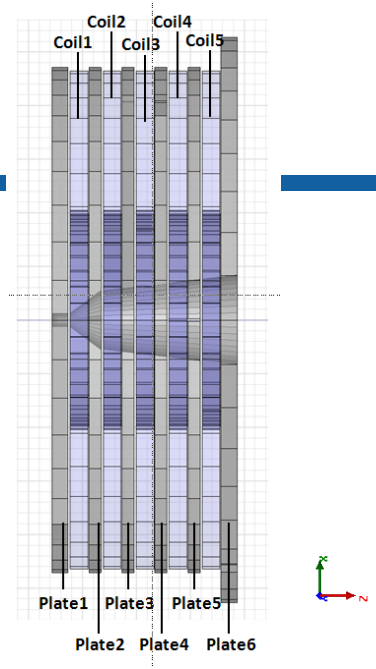

Fz among the Plates as a function of time

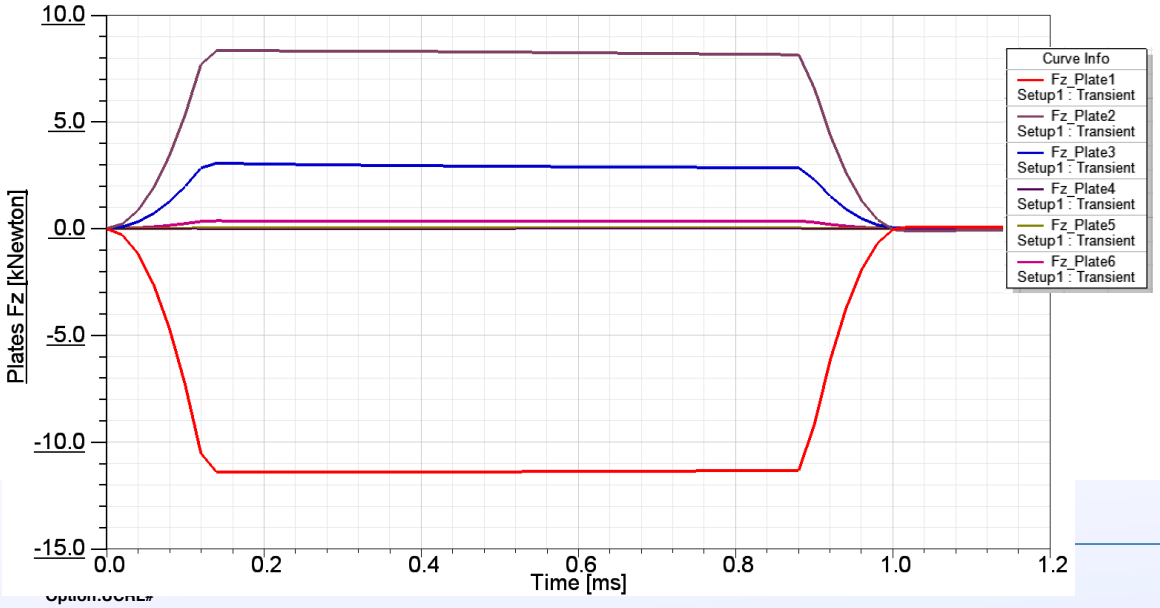

	Fz (max) KNewton
Plate1	-11.3
Coil1	-1.4
Plate2	+8.2
Coil2	+1.4
Plate3	+3.0
Coil3	+0.3
Plate4	0.0
Coil4	-0.1
Plate5	0.0
Coil5	-1.4
Plate6	+0.4

Fz (max) among the Coils and plates

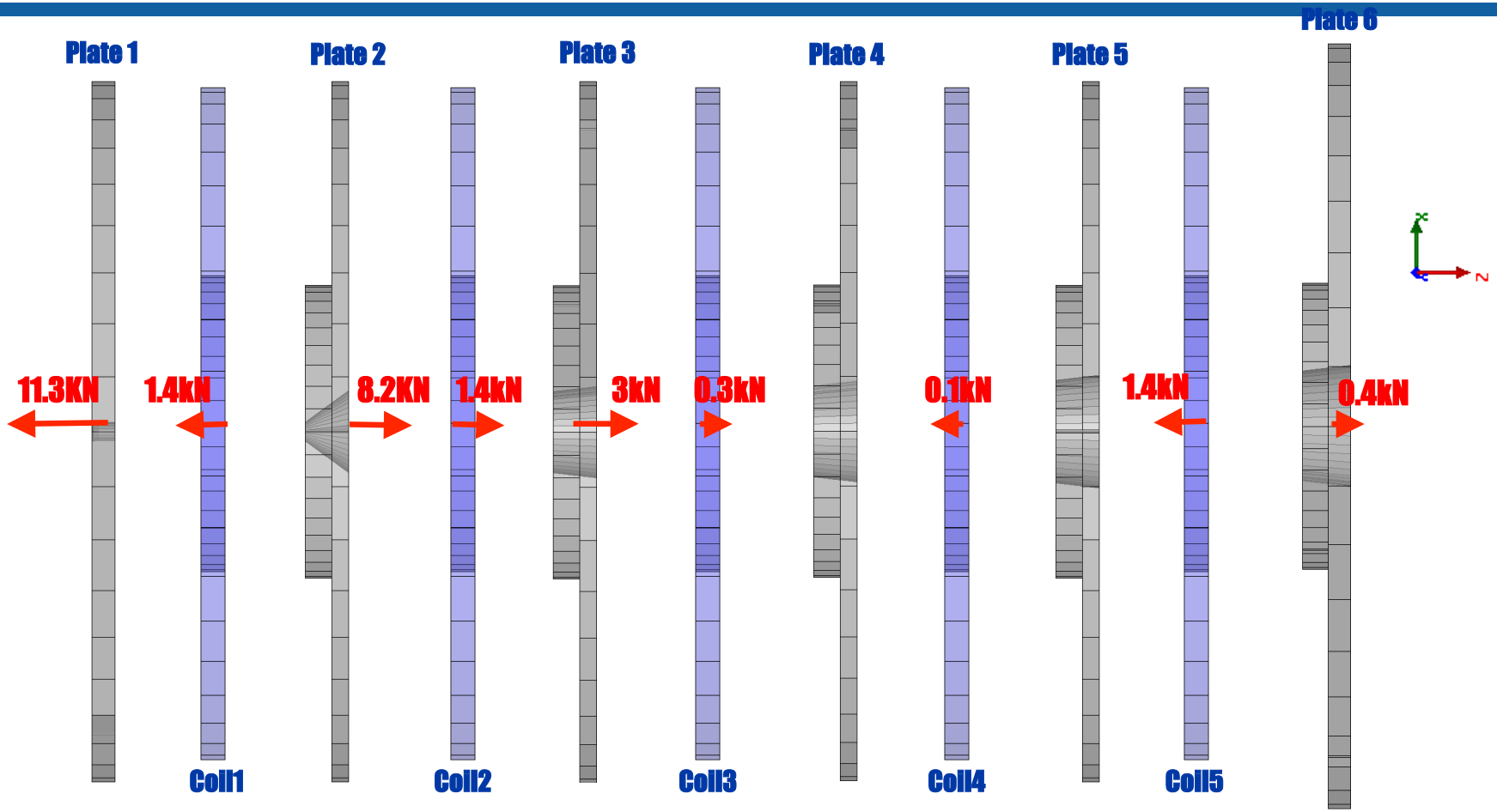

Rotating Seal Tests

- Working with LLNL ES & H to determine feasibility of locating tests at LLNL
- Evaluating space availability and suitability at LLNL
- Beginning design work for enclosure and shaft design
- Part of evaluation is determination of chamber size tested- inclusion of wheel surrogate
- Establishing testing range for off-balance conditions
- Coordinating with Rigaku to evaluate design alternatives- cantilever with larger diameter shaft, motor alternatives, incorporating failure protection

Outstanding Seal Questions

- What range of magnetic fields should be tested? Does field orientation matter? Rigaku certifies operation at 500 Gauss, up to 5 kG if they can run a FE analysis
- Diagnostics for fluid leakage- testing regime for witness plates and vacuum line filters
- Inclusion of water union
- Level of pumping to have online during test
- Inclusion of additional ports to allow testing of contamination at beamline entrance/exit
- Vacuum pressure- 10^{-8} torr

Ongoing work

- Coordinating with Argonne on flux concentrator design and effectiveness
- Evaluating flux concentrator experimental setup
- Designing rotating vacuum seal experiment
- Specifying diagnostic setup for vacuum seal experiment