Crate & Interface Standard Options for the XFEL Warm BPM & Intra-Bunchtrain Feedback Systems

Boris Keil

for the PSI/DESY XFEL Collaboration

Outline

- Introduction
- BPMs & Feedbacks at PSI
- PSI Crate Standards & Plans
- Aspects of the Prototype IBFB
- Aspects of Final IBFBs & Warm BPMs
- Summary & Conclusions

Outline

- **Introduction**
- BPMs & Feedbacks at PSI
- PSI Crate Standards & Plans
- Aspects of the Prototype IBFB
- Aspects of Final IBFBs & Warm BPMs
- Summary & Conclusions

Project Background

- 2005-2008: Switzerland (PSI diagnostics) participates in XFEL "preparatory phase": prototype x/y beam position Intra Bunchtrain Feedback (IBFB), funded by Swiss "Staatssekretaritat für Bildung & Forschung" (SBF)

- Collaboration PSI (80%) – DESY (20%)

- 2008-2015: PSI applies for SBF funding of final XFEL "warm" BPM & transverse beam stabilisation systems

Outline

- Introduction
- **BPMs & Feedbacks at PSI**
- PSI Crate Standards & Plans
- Aspects of the Prototype IBFB
- Aspects of Final IBFBs & Warm BPMs
- Summary & Conclusions

PSI: Particle Beam Types

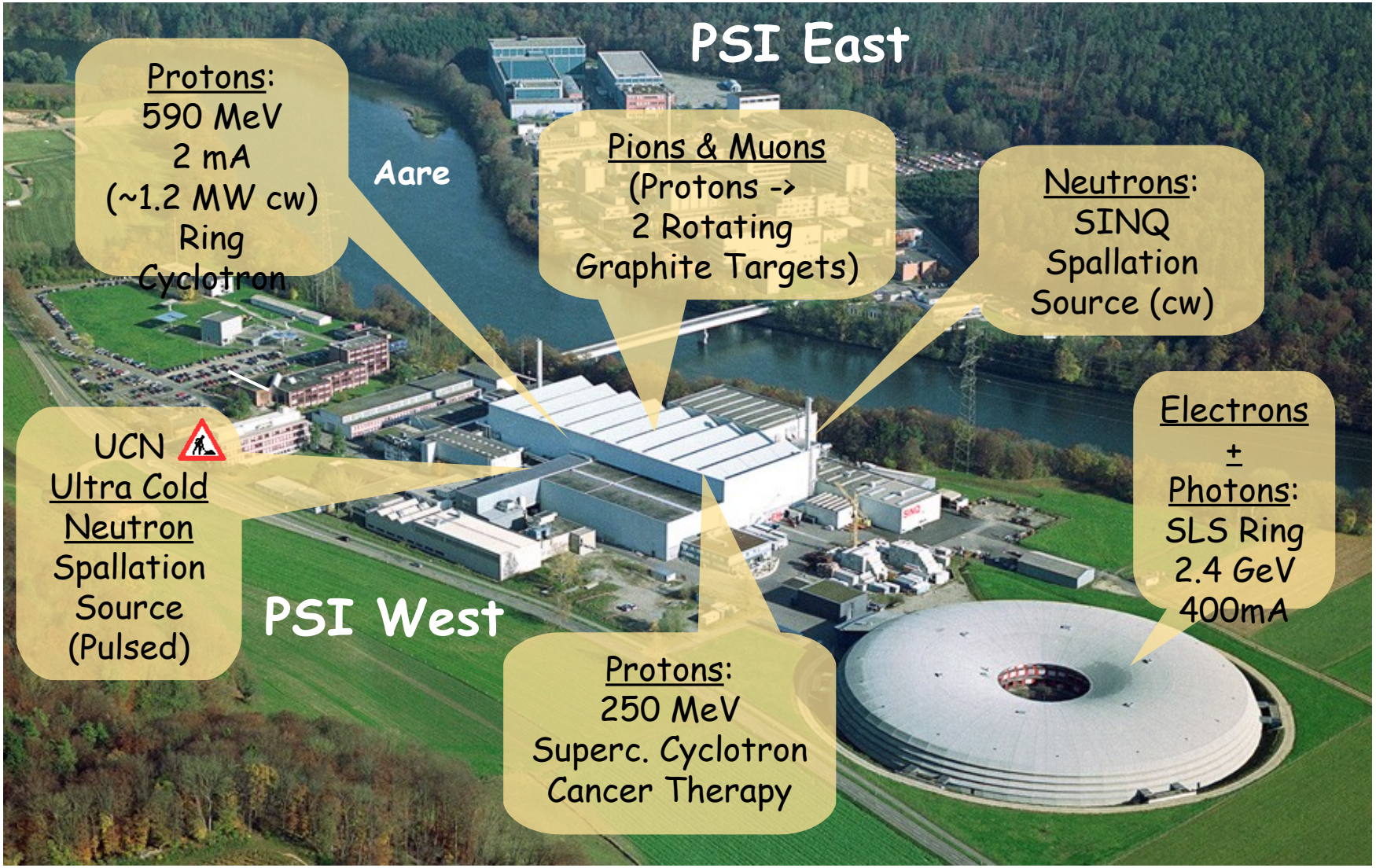

BPM Electronics @ PSI

- SLS:
  - Digital BPM system (in-house design, 1999)
  - RFFE (500 MHz -> 36 MHz IF)
  - VME-board: ADC mezzanines & DDC
  - Programmable gain, bandwidth & data rate
  - Sub-micron resolution
  - Same electronics for linac, booster, ring, transfer lines
  - 1999, licensed to company "Instrumentation Technologies", predecessor of "Libera"
- PSI Proton accelerators:
  - New digital BPM system (in-house design, 2004)
  - Direct undersampling
  - Programmable gain, bandwidth & data rate
  - RF-Front-end + VME-based digital back-end ("VPC") with 2 Virtex2 Pro FPGAs & 2 Gbps Rocket IO fiber optic links
  - VPC VME board also used for many other PSI applications (>300 boards overall): cancer therapy gantry, detectors, …
  - "VPC" licensed to company MEN

Beam Feedbacks @ PSI Accelerators

SLS Fast Orbit Feedback (FOFB)

- 73 BPMs, 144 corrector magnets
- 4 kHz correction rate
- sub-micron beam stability
- VME hardware (BPMs, correctors, DSPs)
- Must run 24/7, most experiments can't work without it

SLS Multibunch Feedback (MBFB)

- In-house design
- MBFB BPM: 2 ns bunch-by-bunch resolution
- Feedback loop: 300 ns latency
- Damping of instabilities & residual top-up injection kick
- Runs reliably 24/7 after removal of all non-PSI hardware & firmware (we should have done that earlier …)

Outline

- Introduction
- BPMs & Feedbacks at PSI
- **PSI Crate Standards & Plans**
- Aspects of Prototype IBFB
- Aspects of Final IBFB & Warm BPMs
- Summary & Conclusions

Future Plans for PSI Accelerators

- SLS:
  - BPM electronics upgrade (> 2010 ?), in-house design
  - Orbit & multibunch feedback electronics upgrade (> 2010)
- 250 MeV PSI FEL test injector linac (commissioning 2010):
  - LLRF & BPM system design (10 um)
- PSI FEL (PSI director: top priority, 6 GeV, SASE, 1st beam 2016 ?)
  - LLRF & BPM system design (1 um ?)

XFEL would benefit from common systems being used & tested at PSI accelerators before XFEL commissioning, and PSI XFEL team needs real beam of PSI accelerators to develop & test their XFEL BPM/IBFB systems -> synergies

PSI FEL Project

PSI X-ray FEL Injector (commissioning 2010, funded)

250 MeV. 0.2 nC, 400 fs, 10 Hz single-bunch

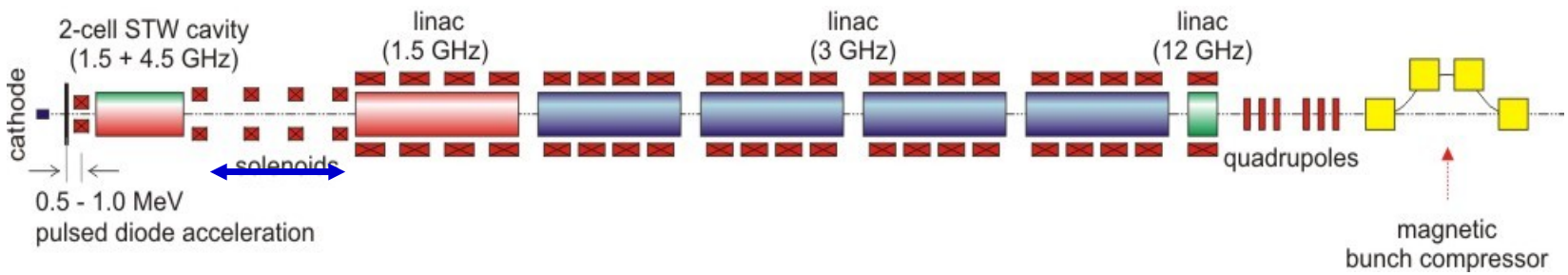

PSI X-ray FEL, low-emittance gun (1st beam 2016 ?)

5.8 GeV, 0.2 nC, 35 fs, 10-100 Hz, L~800m

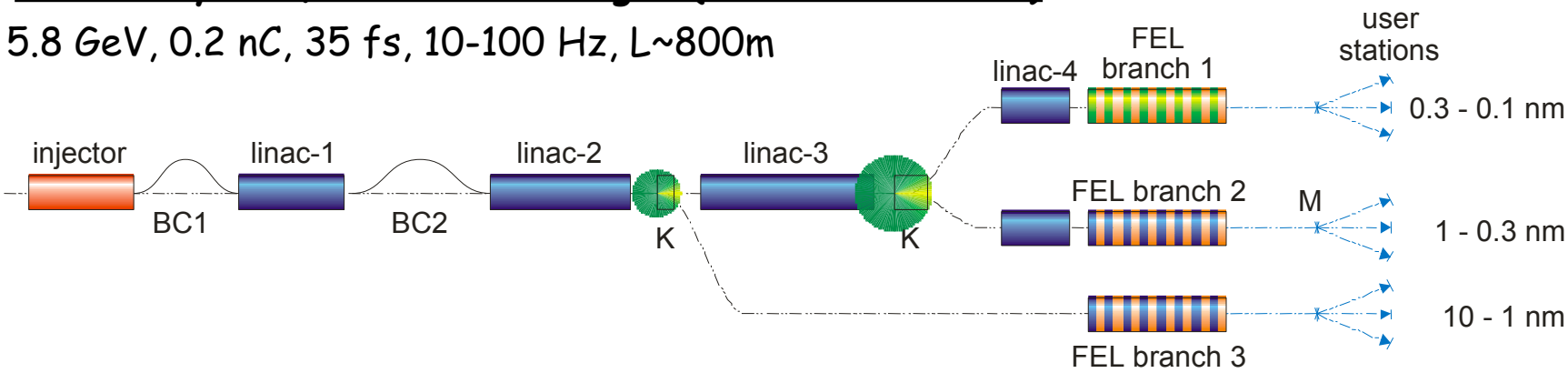

Future Crate Standard @ PSI

Decision by PSI controls group:

- Will use VME & future (VXS, VPX) standards
- Reason: can mix old & new boards in same crate, smooth migration of running accelerators
- Will not use or support ATCA/uTCA
- Uses Multi-gigabit Rocket-IO attached devices (e.g. SLS experiment pixel detectors, stream detector data via Rocket IO fibers to COTS hard disk array)
- Moderate/limited use of network attached devices, mainly for protocol translation

Crate Standards: VME64x, VXS, VPX, …

- VME64x:
  - bus, 250 MByte/s continuously (achieved by PSI digital proton BPM back-end "VPC")
- VXS:
  - Same PCB size & P1/P2 connectors as VME64x
  - New P0 connector, 8 full duplex point-point Multi-gigabit links ("Rocket IO"), typ. 2.5 GByte/s (connector spec: > 6 Gbps)
  - Same protocols supported as xTCA: PCI express, Ethernet, … (protocol determined by FPGA firmware)
  - P1/P2 connectors like VME64x boards: same board can support both VME64x and new VXS protocols -> smooth migration
  - Many COTS high-performance (0.5-2 Gsps) ADC/FPGA boards: Agilent, Mercury, Pentek, Techmicro, VMETRO, …
- VPX:
  - Same PCB size as VME64x, but different backplane connector with 192 multi-gigabit pairs. Also still supports "old" VME protocol.

VXS Boards & Crate Types

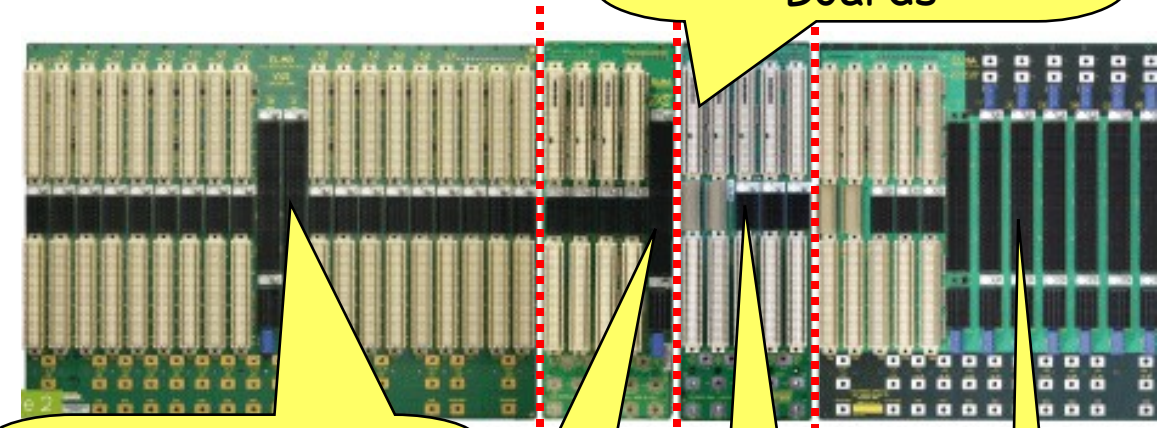

Hybrid Crate: Slots for VME64x & VXS Boards

Two switch slots (double star)

Single-star

Hardwired

Processor Mesh

New Agilent VXS ADC/DAC FPGA board family (offered PSI collaboration & use of their ADCs)

VXS Specifications & Protocols

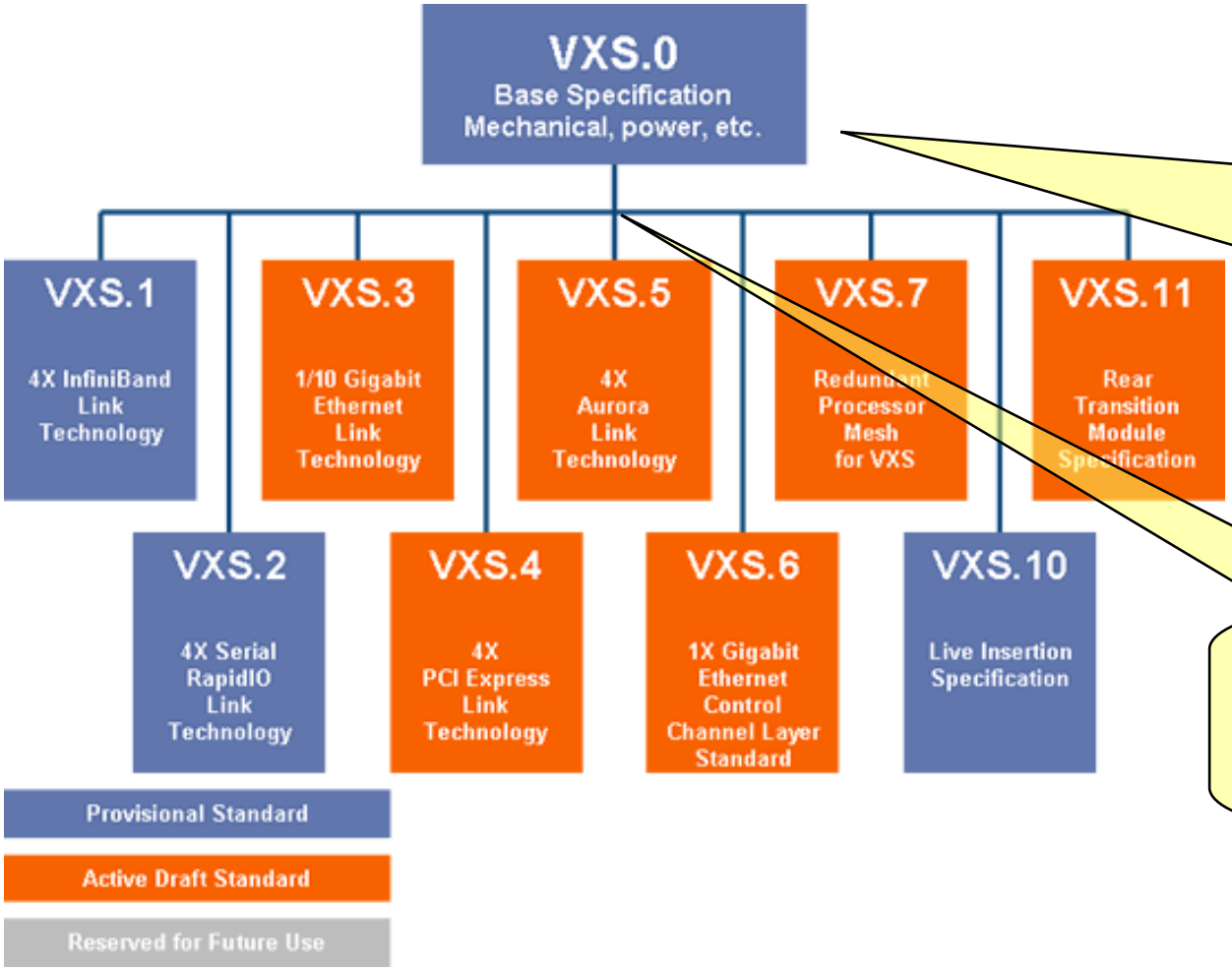

Same protocols supported as xTCA => VXS & xTCA speak same language

Protocol depends on FPGA firmware

VPX Boards & Crates

Dual-Core PowerPC

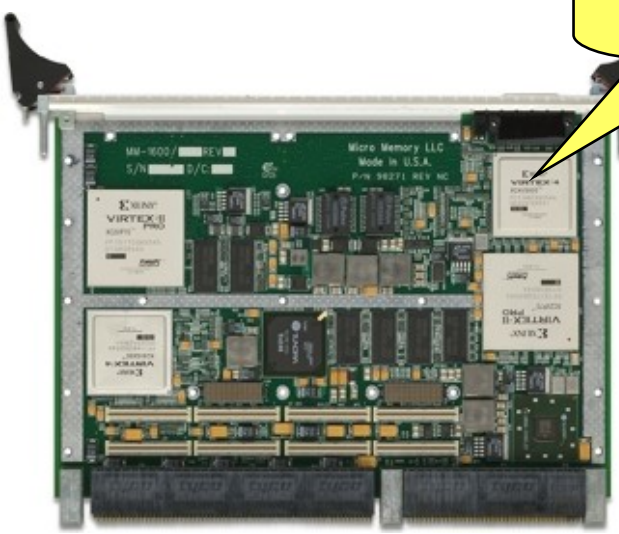

Quad-FPGA VPX Board

Hybrid Crate: Slots for VME64x, VXS and VPX Boards -> smooth migration

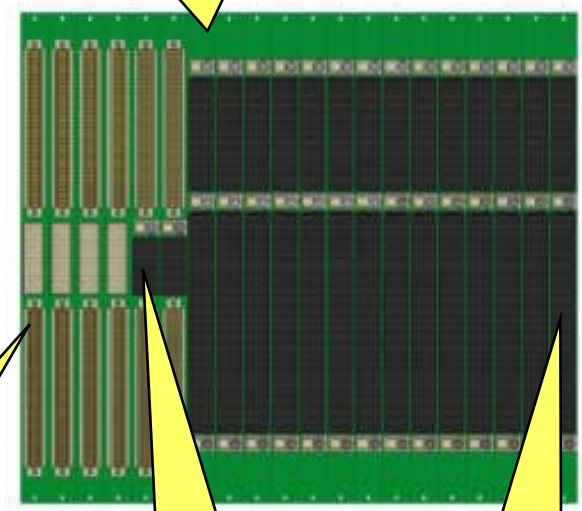

VME: 250 MByte/s

VXS: 2.5 GByte/s

VPX: 100 GByte/s

Need ~10 MByte/s per XFEL standard BPM

Outline

- Introduction
- BPMs & Feedbacks at PSI
- PSI Crate Standards & Plans
- **Aspects of the Prototype IBFB**
- Aspects of Final IBFBs & Warm BPMs
- Summary & Conclusions

Resources (2005-2008)

-IBFB prototype (2005-2008): lot of work, collaboration PSI-DESY

- BPM pickup (PSI/DESY)
- RF-front-end (PSI)
- FPGA/DSP VME/VXS "PDC" processing board HW/FW/SW (PSI)
- 0.5-1 Gsps ADC/DAC mezzanine (PSI)
- Kicker amplifiers (PSI/DESY)
- Kicker magnets (PSI)
- BPM test bench, automatic test systems, … (PSI)

- DESY: mechanical, vacuum (~ 2 people full time equiv.)

- PSI: 4 people full time (SBF-funded for XFEL project)
  + 4 people (full time equiv.) from regular PSI staff (SLS, …)

- PSI XFEL contribution needs regular PSI staff, but PSI can only afford this when there are (enough) synergies PSI <-> XFEL. PDC board & mezzanine: 5 people in 2007

- 2005: PSI & DESY agreed to use VME/VXS for prototype system

XFEL Beam Stability Requirements

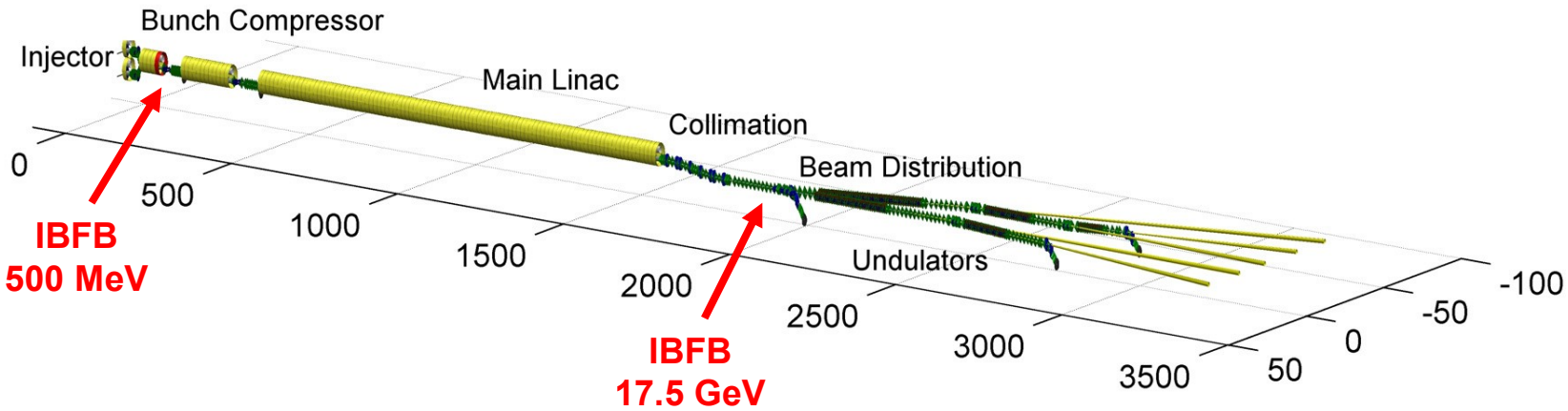

- Stable lasing: x/y stability < σ/10 ~ 3 μm @ undulators
  -> Intra-Bunchtrain Feedback ("IBFB") @ 17.5 GeV
- Reproducible main linac entry: IBFB @ 500 MeV
- Damp x/y beam motions Hz … some 100 kHz: vibrations (ground, cooling), power supply/kicker jitter, long-range wakefields, gun charge -> position jitter, …

IBFB Topology

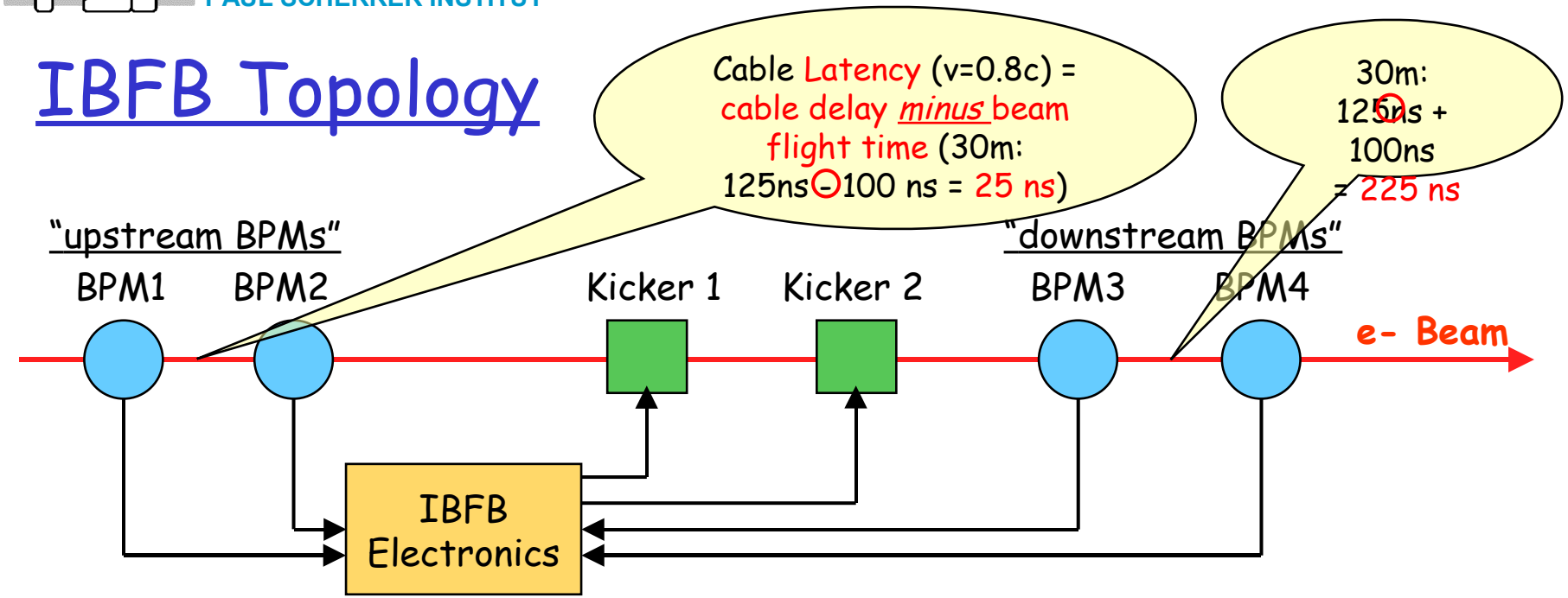

- Calculate kick for bunch N+1 from upstream BPM positions of bunches N, N-1, N-2, N-3,... using a model
- Use downstream BPMs to check & correct model (less fast)
- Feedback loop (upstream BPMs->electronics->kickers): 200 ns latency
- Why upstream BPMs for fast feedback loop ?
  - Less latency
  - Larger distances -> More angle resolution, less kicker power
  - BPM1+2 see unkicked beam: IBFB puts less noise onto the beam

IBFB Specifications

IBFB prototype (test @ 1 GeV DESY VUV FEL 2008/2009):
relaxed requirements, but try to come close to XFEL specs.

	VUV FEL	XFEL
bunch-by-bunch beam stability - at location of IBFB - along undulators	< σ/10 5 - 15 μm < 5 μm	< σ/10 3 - 10 μm < 3 μm
bunch-by-bunch BPM resolution	≤ 2 μm	≤ 1 μm
Bunch spacing = ideal IBFB latency	< 1000 ns	< 200 ns

IBFB Hardware

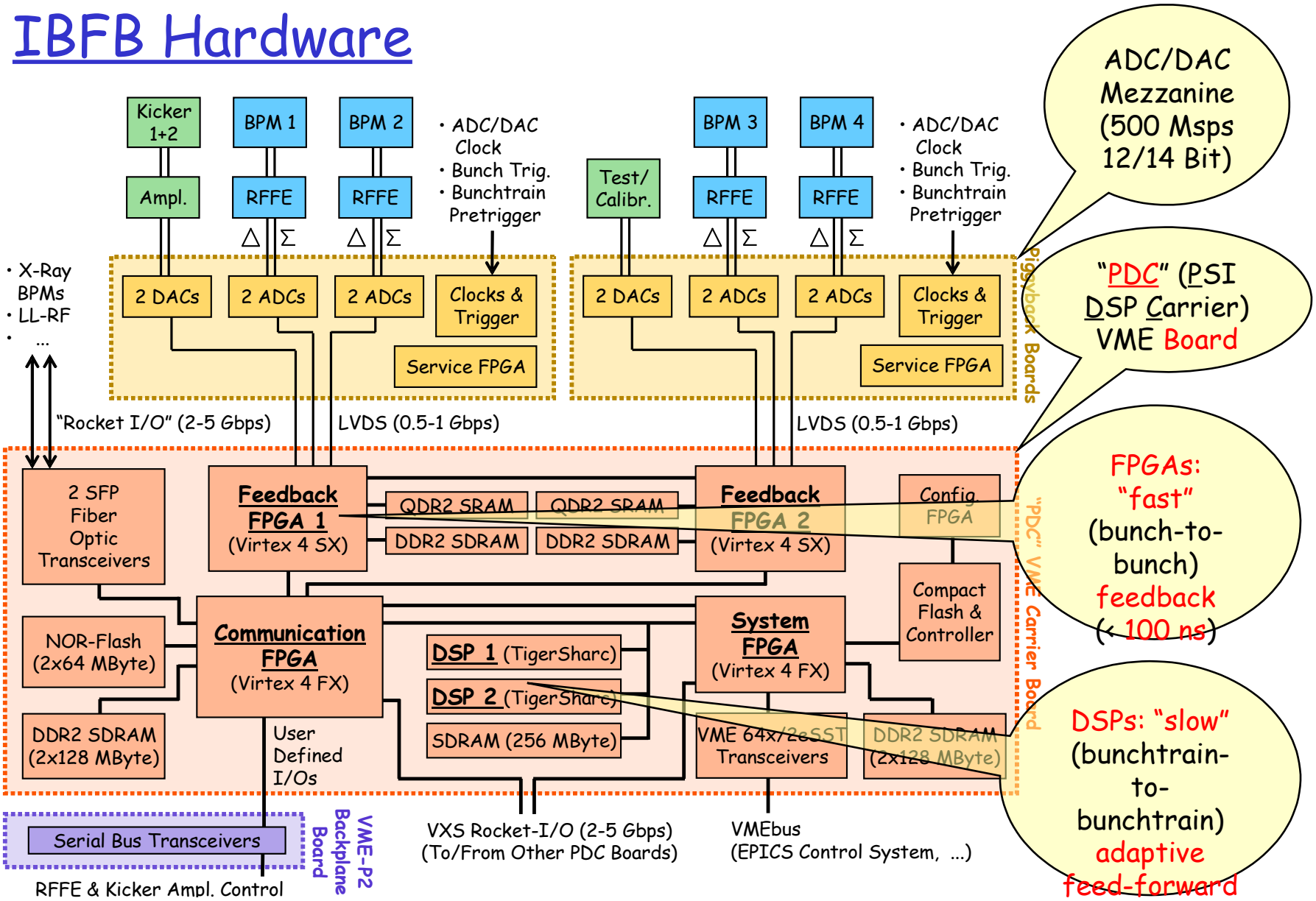

"PDC" VME/VXS Board

- Two 500-pin 10 Gsps mezzanine connectors. Low-cost single-slot version for XFEL BPMs would need 5.5 times less crate volume per high-speed (0.5-2 Gsps) ADC than AMC/ATCA (4 A+B+ AMCs + ATCA cutaway carrier)
- PCB layout (M. Roggli) finished end 2007, tests Q1-2/2008.

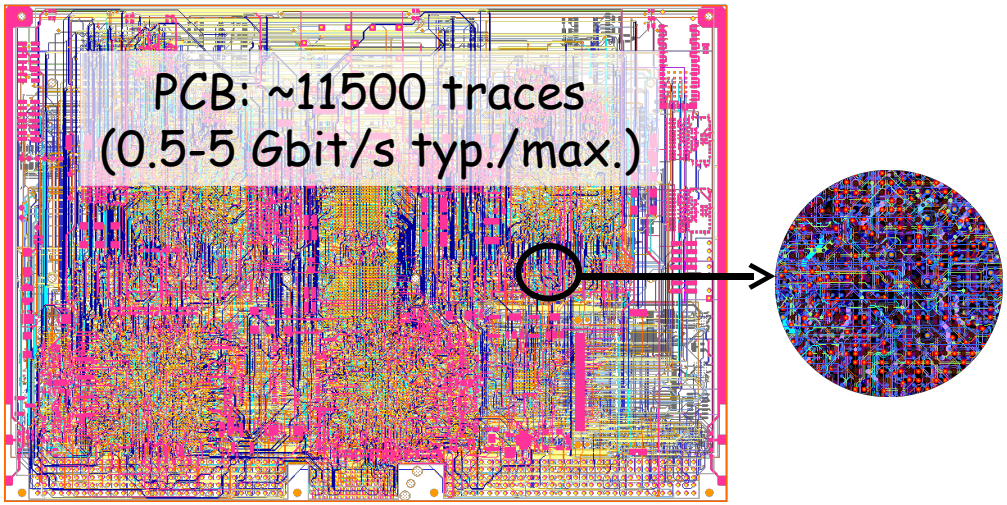

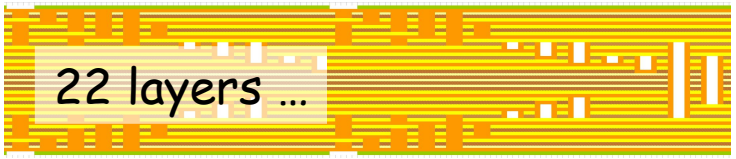

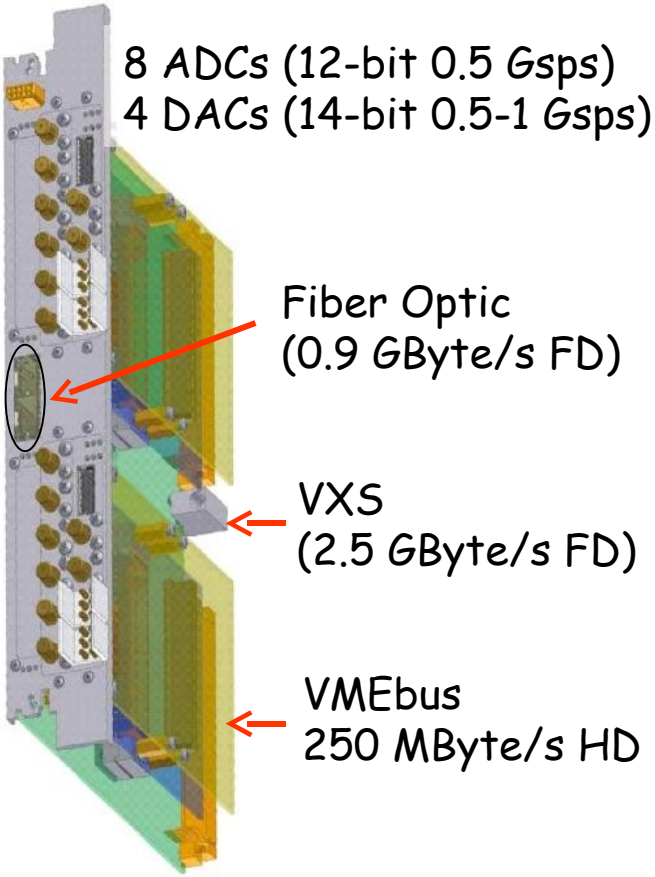

Outline

- Introduction
- BPMs & Feedbacks at PSI
- PSI Crate Standards & Plans
- Aspects of the Prototype IBFB
- **Aspects of Final IBFBs & Warm BPMs**
- Summary & Conclusions

Resources (2008-2015)

- Final XFEL IBFB & warm BPM systems (2008-2015):
  - 3 BPM pickup types (standard, undulator, IBFB), 380 pickups
  - 3 BPM RFFE types (ditto), 380 modules
  - IBFB processing board & ADC/DAC mezzanine (~ 4 pieces)
  - 3 kicker amplifiers types
  - 3 kicker magnets types
  - Test benches, test systems, clock/trigger distribution, …
- DESY: ~ 4 people
- PSI:
  - VME/VXS for IBFB & BPMs: ~ 9 SBF-funded people + 3.75 regular PSI-staff people
  - xTCA for IBFB & BPMs:
    - Lack of synergies: 3.75 – 3 = 0.75 people from regular PSI staff (2008-2015): 24 man-years more to be paid by XFEL project
    - Much more work (new designs, no know-how & infrastructure): 20 more man-years

=> xTCA: ~44 man-years (>~8 MCHF) more, systems still 2-3 years too late

=> IBFB & BPMs need to be VME/VXS

Thoughts: Market & Longevity

- Telecom: dumps hardware frequently, huge quantities, development man-power not relevant -> cheap, short life, price- & performance-driven
- Accelerators: control group man power usually much more expensive than hardware -> long life is important, not price- & performance-driven, similar requirements as defence/aerospace (A&D)
- VME: growing, 70% market share in north American A&D market (2007)
- VXS: new standard, 2006: 10 vendors, 2007: 28 vendors, number of products doubled, 11% of VME single-board computer market
- xTCA market report 9/2007 (from VDC): 12-18 months "delay" in the market
- xTCA: huge growth of next telecom standard means than last standard is dumped/getting obsolete rapidly. Longevity ???
- xTCA will be old (for a telecom standard) when ILC has first beam (> 2020 ?). 14 years ago: VESA local bus -> 33 MHz PCI. Rocket IO unknown …
- Will ILC use xTCA (must say yes to get R & D funding ?), or the standard after xTCA (and xTCA as interim R & D vehicle) ?

Interface/Crate Options

IBFB:

- VXS or hybrid VME/VXS crate
- Upstream BPMs: PDC board, low-latency
- Downstream BPMs: Low-cost version of PDC, same mezzanine standard but different mezzanine (high-latency lowest drift)
- Flexible PDC board: many control system interface options:
  - VME IOC in slot 1 (necessary for tests at PSI) + Ethernet
  - Or VXS IOC
  - Or "Rocket-IO attached device" (multi-gigabit link to small separate crate, e.g. xTCA, idea from K. Rehlich), protocol to be defined. Option: IOC (DOOCS, EPICS, …) on PDC (in FPGA)

Undulator BPMs:

- same electronics as downstream BPMs, but temperature-stabilized
  -> each BPM electronics may need dedicated "pizza box" a la Libera, but VXS or normal VME crate also feasible. Fiber optic Rocket-IOs.

Button BPMs:

- Same digital back-end & interf. as undulator electronics, simpler RFFE

Reliability & Spares

General:

- PSI Hardware design: redundant internal reviews (every signal & IC)
- PCB Production: X-Ray & optical inspection, automatic test systems, …
- PSI "VPC" VME board (pDBPM back-end): 300 boards, no failures during 1.5 years of operation
- PSI experience: xTCA crates would have no relevant impact on BPM & feedback reliability. Dominant faults (e.g. SLS): analog/noise (RFFE, …) & signal artefacts
- Telecom: can re-route digital signals. Accelerators: usually cannot re-route analog signals => no 99.999% availability …

IBFB:

- Needed for lasing of all/most bunches
- Plan: Completely redundant: 1 working system (WS), 1 backup system (BS), separate crates, no common elements
- High-level application monitors WS, switches to BS if WS behaviour not as predicted (using model & regular BPMs)
- May not be needed (PSI feedbacks: not redundant but highly reliable), but still useful for tests & firmware upgrades

Reliability & Spares (Cont'd)

Undulator & Standard BPMs:

- VME-based PSI BPM systems typ. >> 10 times better than XFEL reliability/MTBF specs
- Redundant VME crate supplies possible

Spares:

- xTCA would cost PSI >= 8 MCHF more than VME/VXS: can buy 1000 spare crates & IOCs from that …
- Just buy enough for XFEL life time: Allows to use even "old" VME electronics & crates for XFEL. Weight costs for stock of spares against cost for development of new (non-VME) systems.

Outline

- Introduction
- BPMs & Feedbacks at PSI
- PSI Crate Standards & Plans
- Aspects of the Prototype IBFB
- Aspects of Final IBFBs & Warm BPMs
- **Summary & Conclusions**

Summary & Conclusions

- PSI needs VME/VXS in order to deliver reliable IBFB & BPM systems on time & on budget
- Flexible interface options of PSI hardware minimises work for PSI & DESY: VME and VXS and network-attached and Rocket-IO attached (e.g. to xTCA crates), and much more compact than AMC/ATCA ADC boards
- VME/VXS for IBFB/BPMs: expect positive impact on machine uptime & performance compared to xTCA, since more man power can be invested in components that are much more vital for reliable lasing of the XFEL (e.g. undulator BPM electronics).
- Learn from FLASH: What is really limiting machine performance & reliability ? Crates ? Immature systems & components ?
- Other accelerator subsystems that need (or believe to need) xTCA should carefully check if they have sufficient resources & man-power to deliver mature & reliable hardware & firmware on time & on budget.
- XFEL needs reliable systems soon. First beam of ILC nearly a decade later (?) -> much more time for R & D. If I worked for ILC I would like to use the XFEL as a test bed.

Using xTCA instead of VME/VXS as board form factor for XFEL IBFB & BPMs would be expensive plastic surgery on a perfectly fine control system appendix. PSI would prefer to work on vital organs (RFFEs, …) instead.

Optimising the crate standard reliability is not equivalent to optimising the overall accelerator reliability (in a world of limited resources).

The future VME standards VXS & VPX are just two more animals in the zoo of different xTCA crate & board standards. VXS/VPX & xTCA speak the same languages. VXS/VPX are my favourite animals because they can also talk to the huge & still growing ecosystem of VME64x animals, and can share the same cage with them.

Thank you for your attention !