The Importance of Intelligent Platform Management Controller for LLRF system

Dariusz Makowski, Technical University of Łódź, DMCS
ATCA LLRF project review, DESY, 3-4 December 2007

Agenda

1. Intelligent Platform Management
2. Development of IPMC for LLRF system
3. Module Management Controller
4. Diagnostics offered by ATCA standard
5. Non-standard diagnostics
6. FPGA configuration management system

Intelligent Platform Management

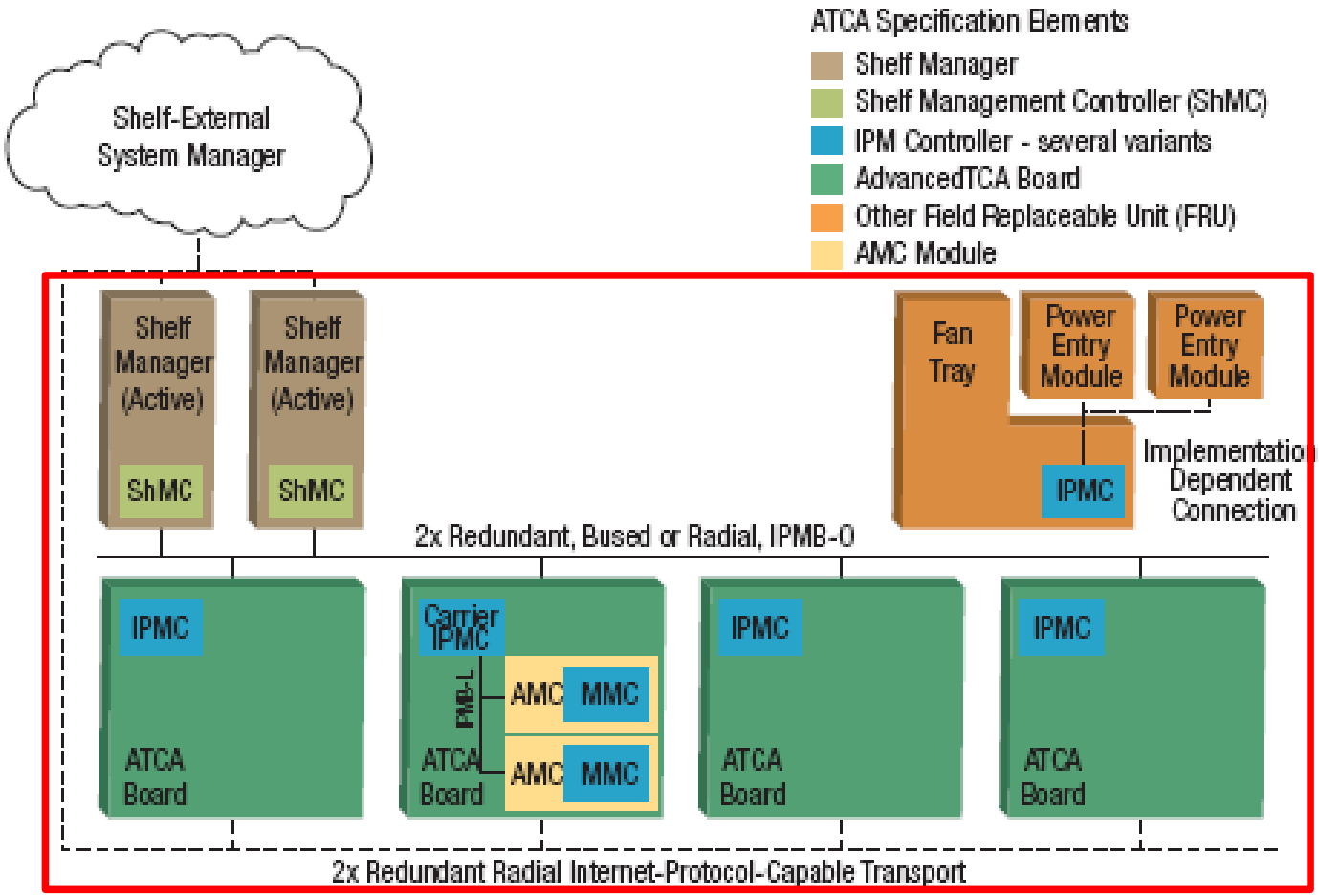

Figure 1 All types of management controllers in an ATCA/AMC-based shelf are building block candidates.

ATCA crate and ShelfManager

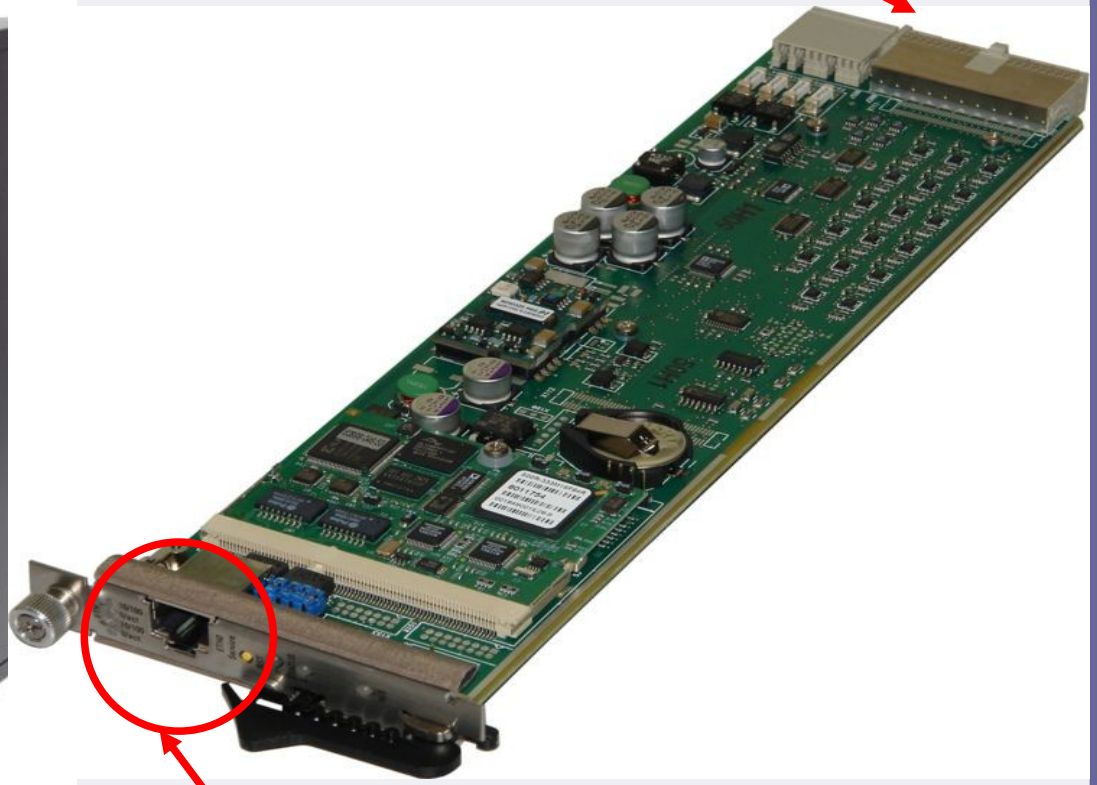

IPMI interface I²C

Ethernet 10/100 Mbit

Redundant ShelfManager

ATCA carrier board with IPMC

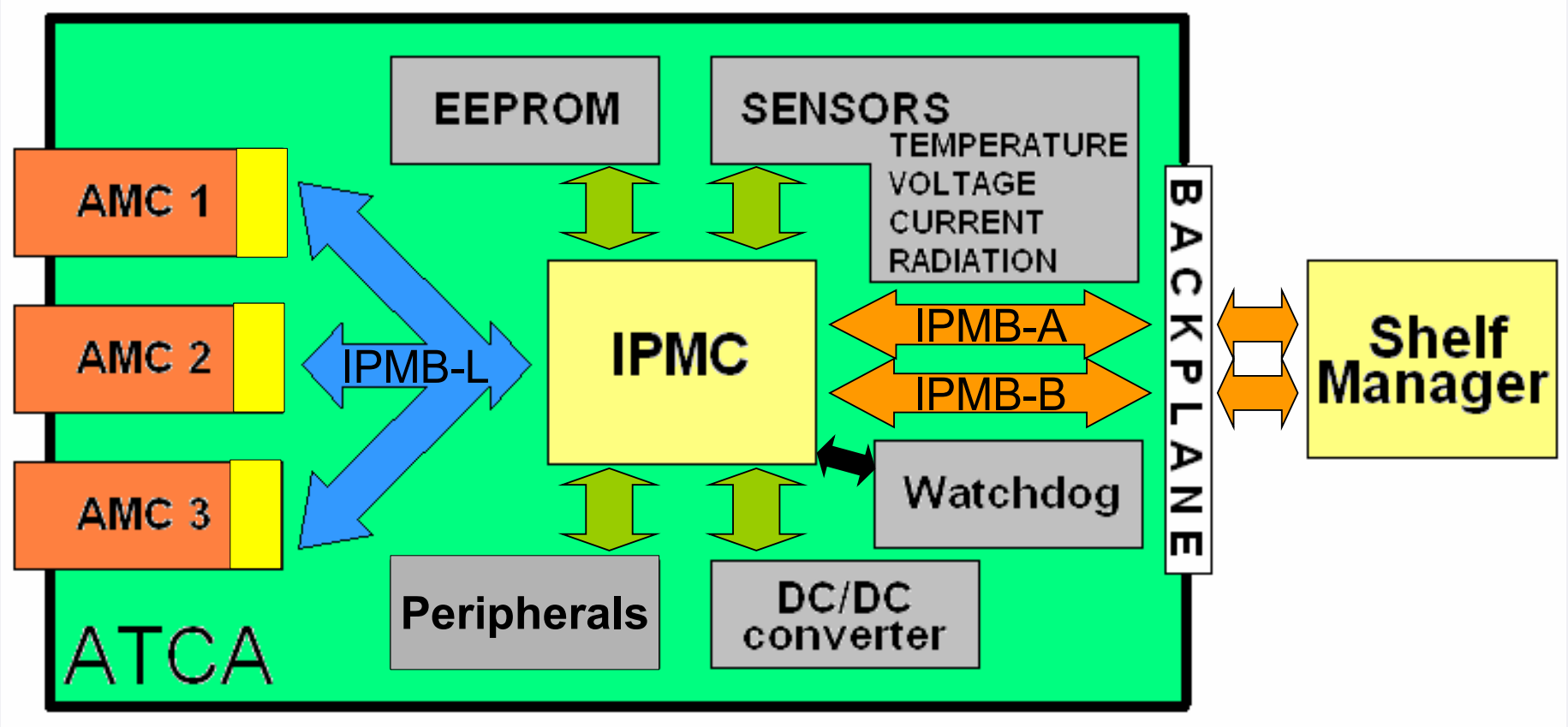

IPMB-L AMC - I2C Bus

Peripheral I2C Bus

Redundant I2C IPM-Buses that aggregate into IPMB-0

Module Management Controller

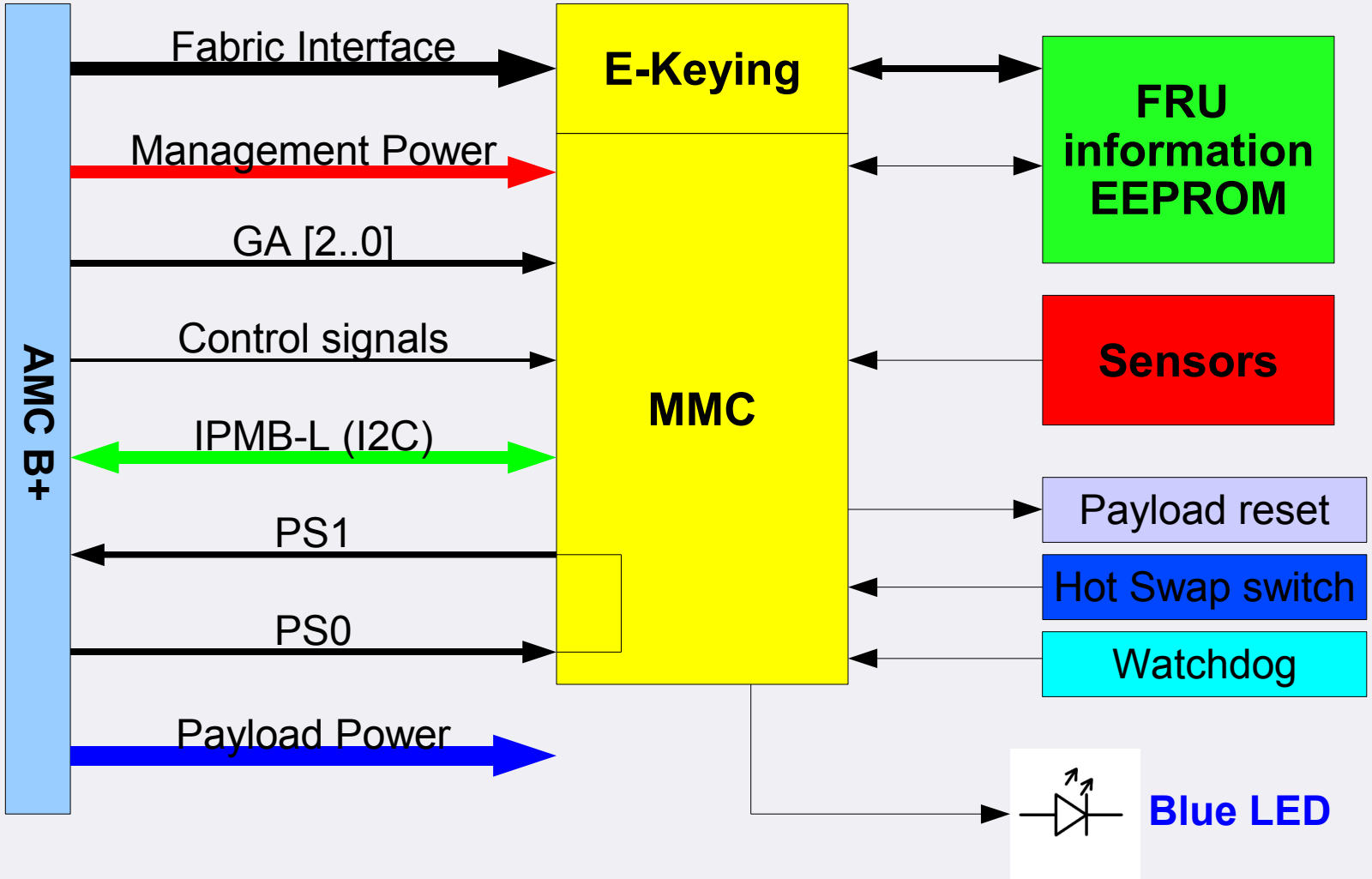

Diagnostics of ATCA-based systems

Useful diagnostics offered by ATCA standard:

1. Thermal violation – IPMC controls temperature of ATCA and AMC components
2. Monitoring of supply voltages
3. Monitoring of supply currents
4. Monitoring of main power converter (-48V to +3V3/+12V)
5. Payload control (read of device state, reset and other user-dependent diagnostics)
6. External watch-dog for IPMC (with external oscillator independent from IPMC oscillator)
7. SM periodically tests state of IPMC on ATCA boards
8. Electronic Keying (E-Keying)

Additional diagnostics:

1. Monitoring of gamma and neutron radiation in ATCA crates and other important spots in accelerator tunnel
2. Reference clocks detectors

AMC module for radiation monitoring

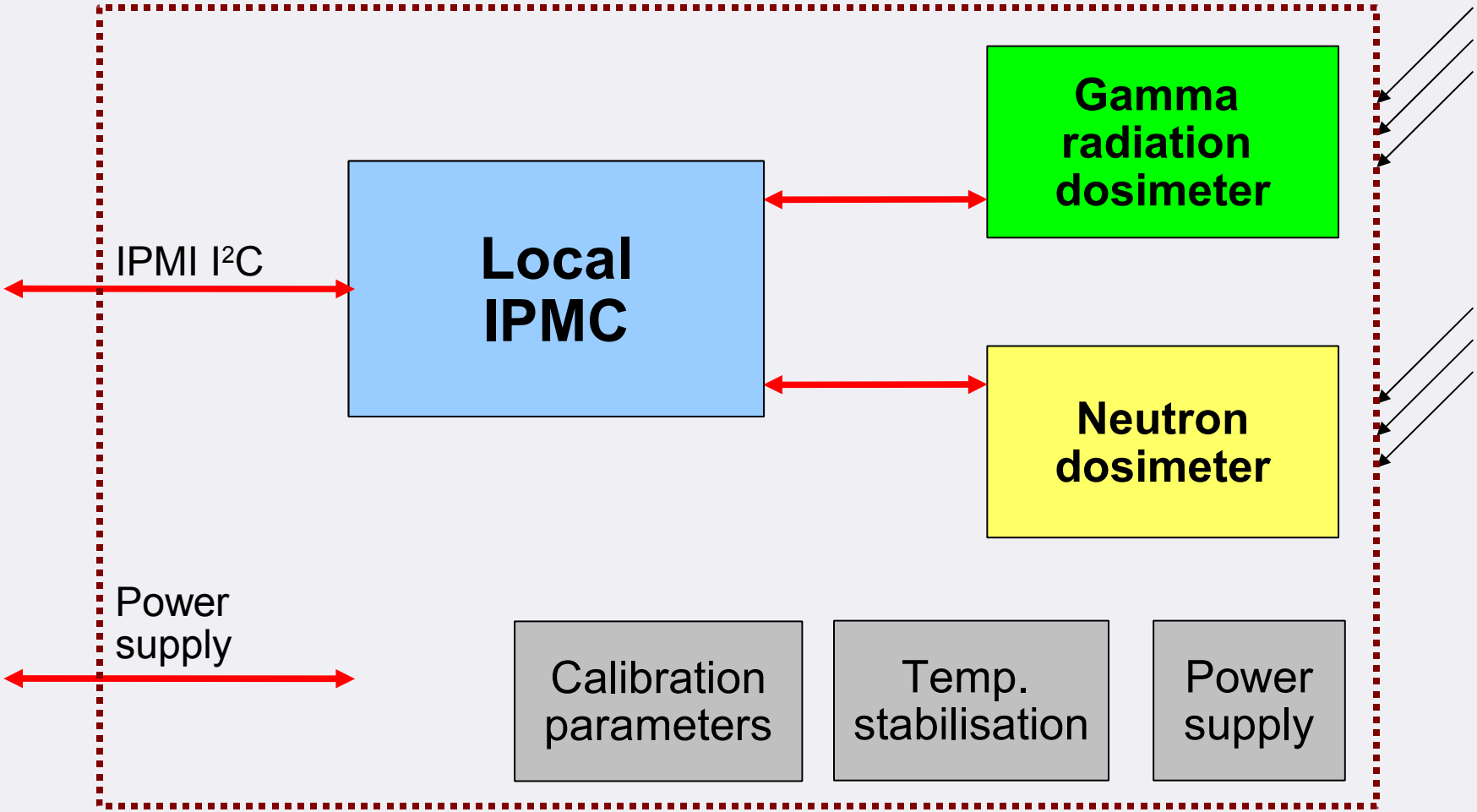

FPGA Configuration Management System

Aim: update or check configuration of programmable devices present of ATCA boards via IPMI

External computer with configuration firmware database

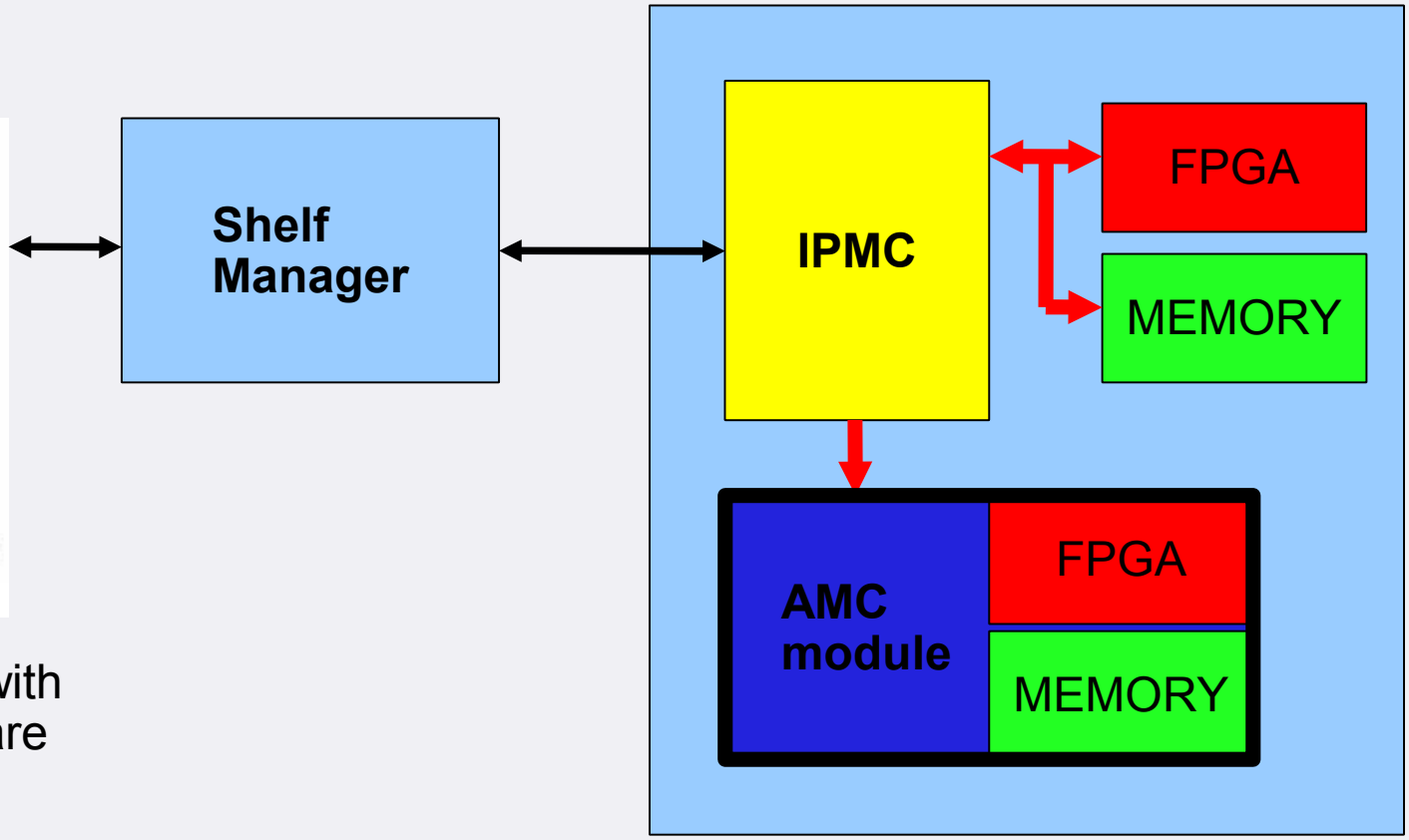

Thank you for your attention

Spare slides

Power Distributtion Management Architecture

SM

(Power budget)

IPMC

(Carriet current and AMC bays descriptors)

MMC

(Current descriptor)

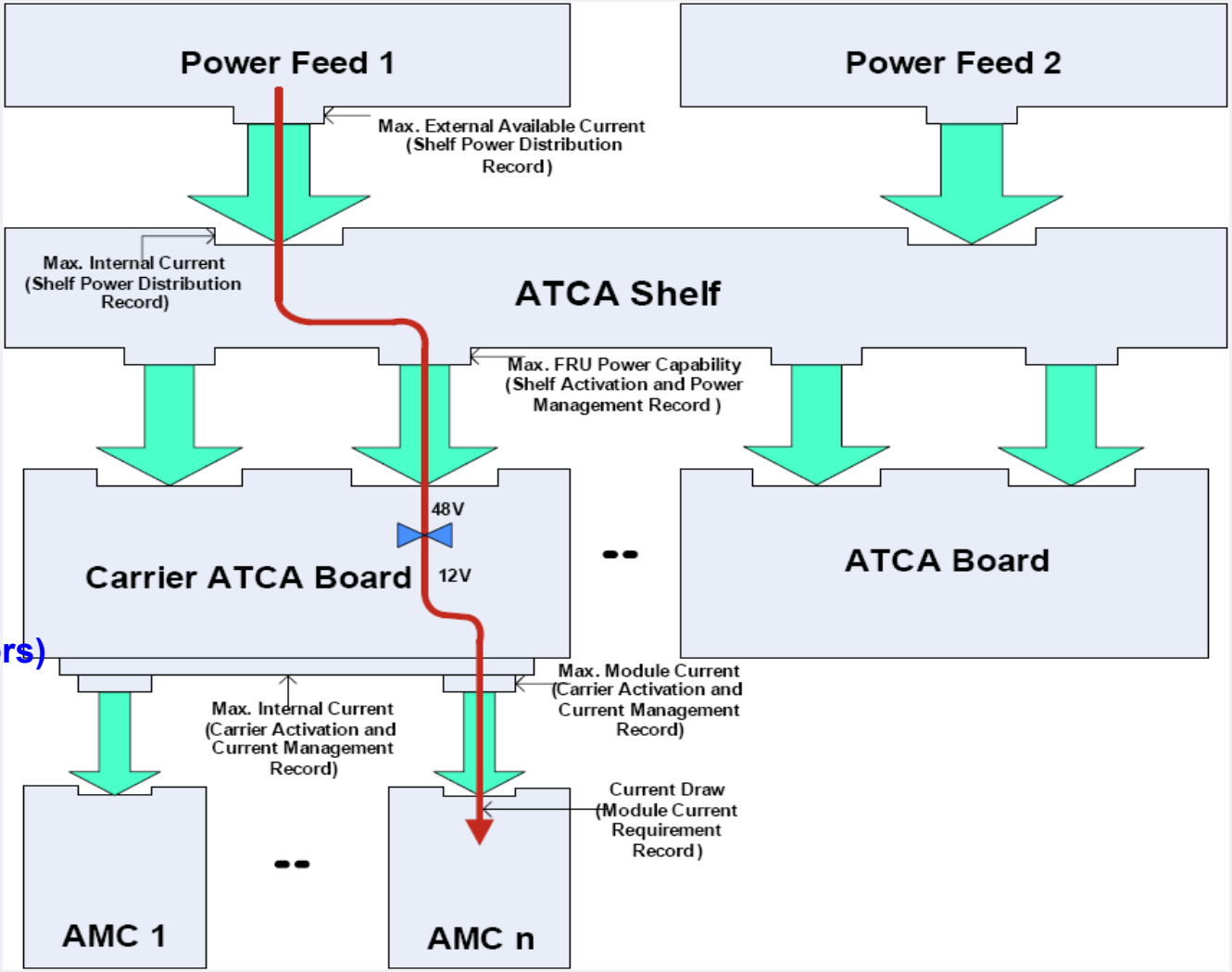

Electronic-keying

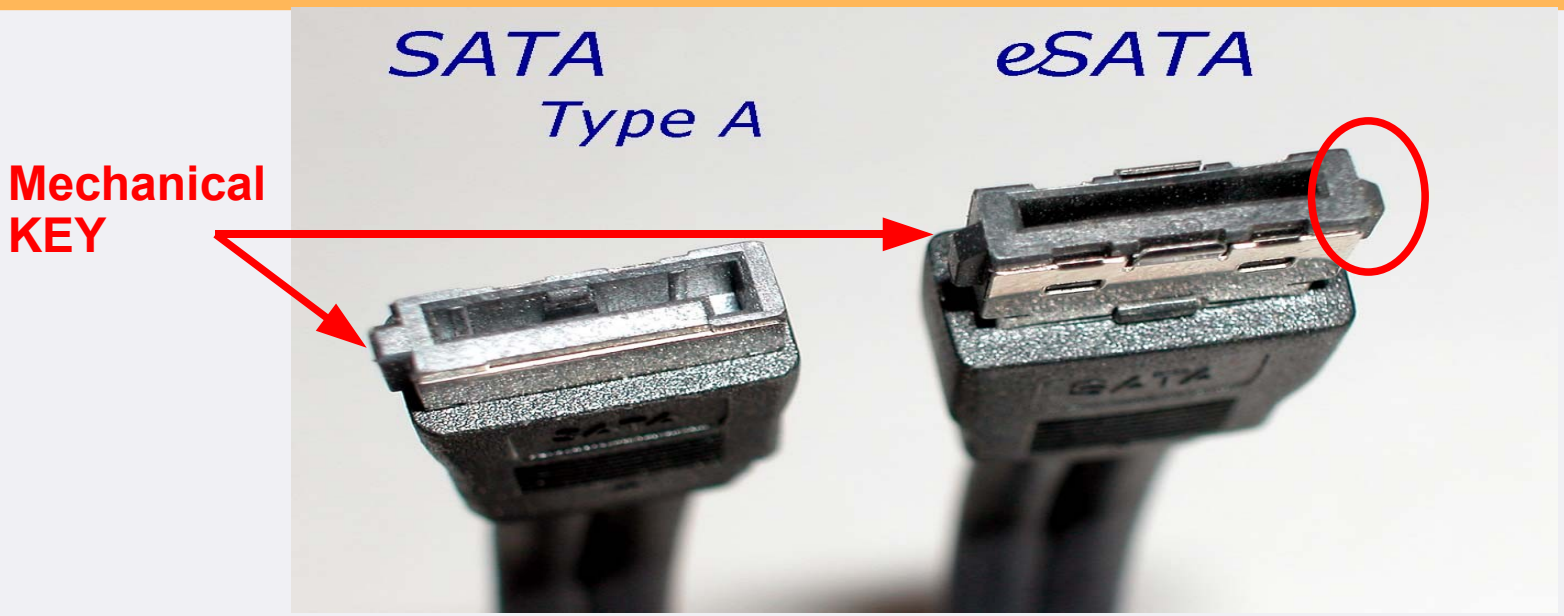

Electronic Keying is the mechanism used to dynamically satisfy the needs that had traditionally been satisfied by various mechanical connector keying solutions:

- Prevent mis-operation
- Verify fabric compatibility
- E-Keying between the Modules and switch(es)
- Point-to-point E-Keying for AMC modules

AMC Power Requirements

Requirements:

Module Power

MP = +3V3 ±5%

MP <150mA

MP cap. < 150uF

Paylod Power

PP = +12 ±10%

PP < 7.4A

PP cap. < 800uF

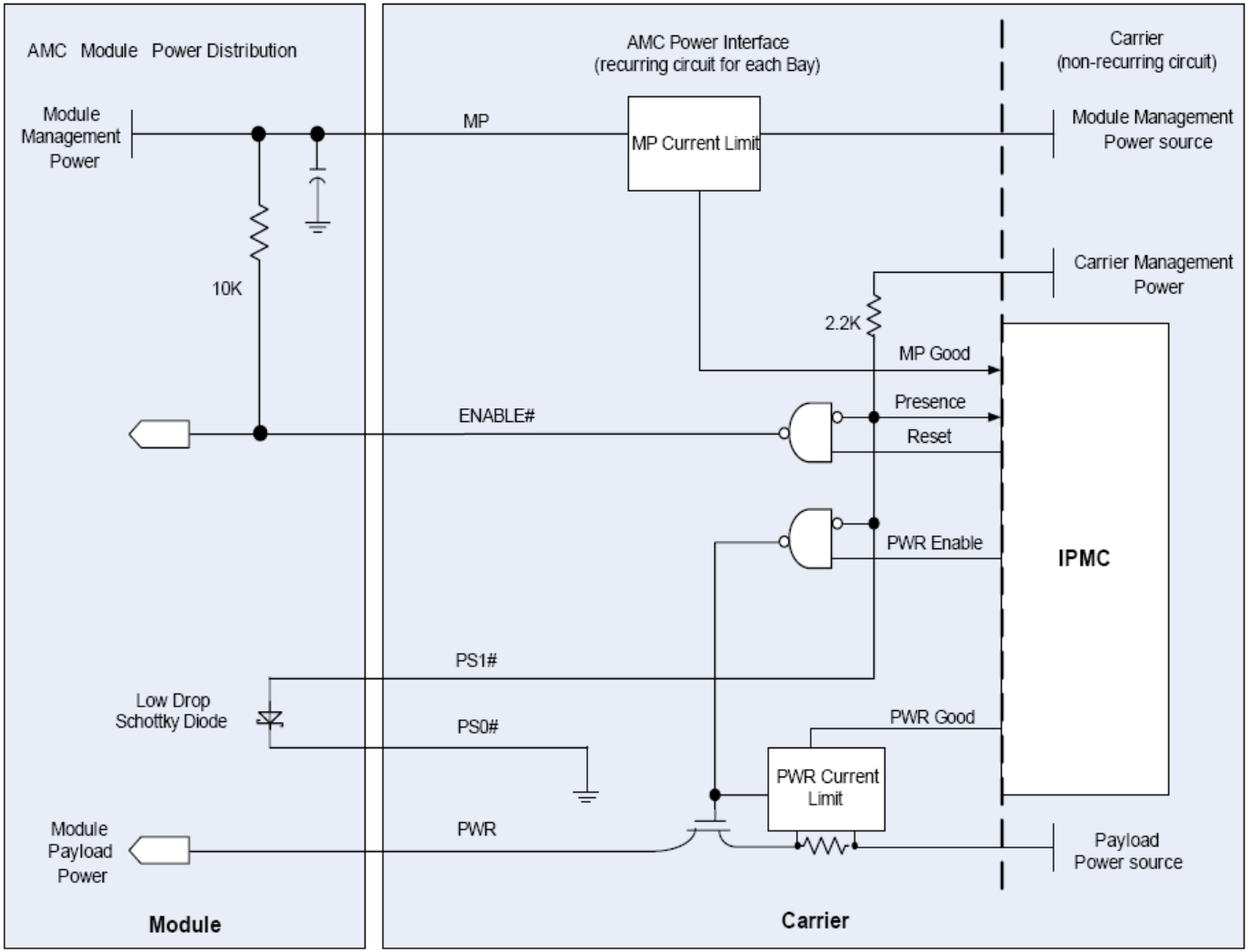

Power supply in ATCA

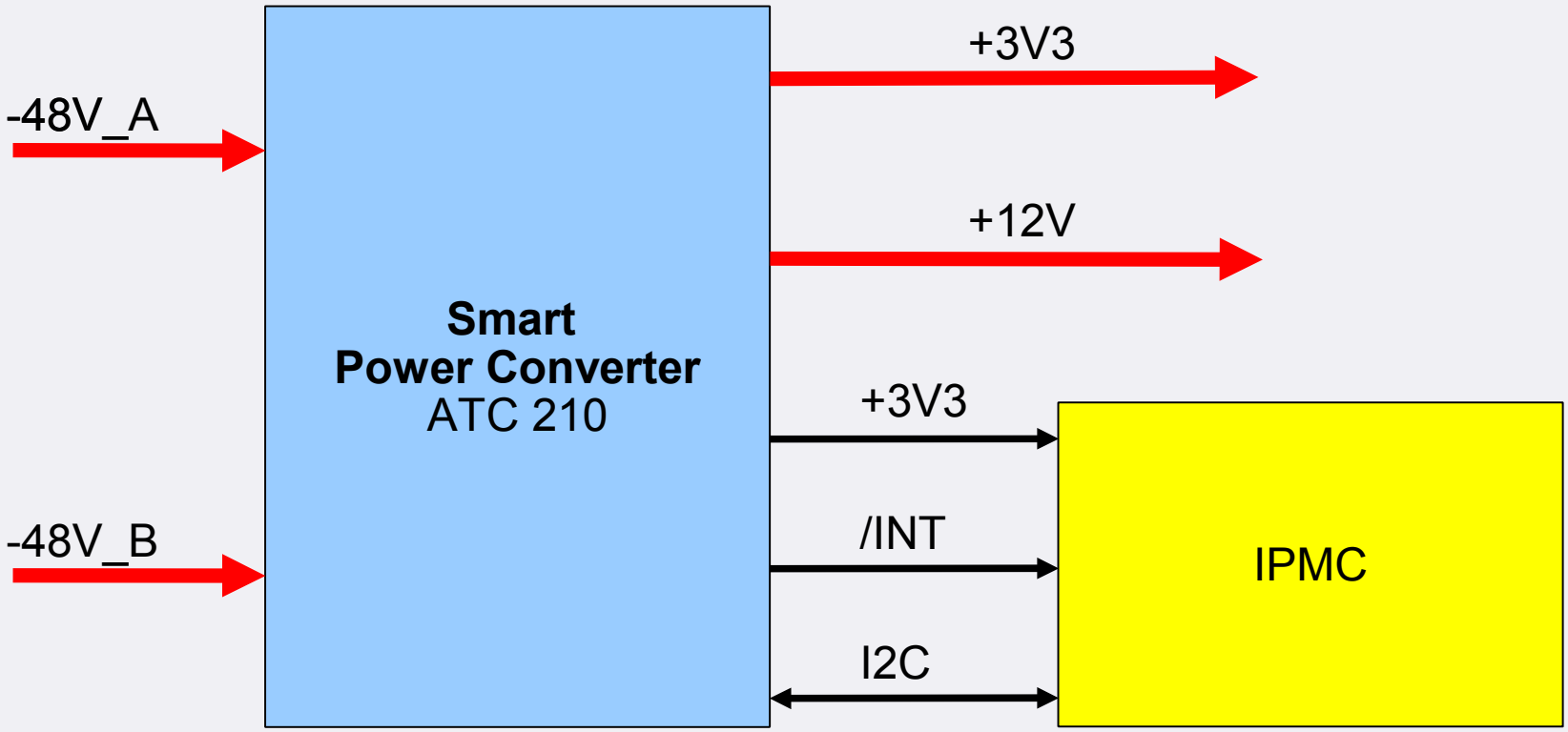

Requirements for RAMC

Detection ability:	neutron fluence, gamma dose
Lowest detectable level of fluence:	$10^4 – 10^5$ n*cm^{-2}
Lowest detectable level gamma:	$10^{-3} – 10^{-2}$ Gy(Si)
Level of neutron fluence tolerance:	in range of 10^{12} n*cm^{-2}
Level of gamma rad. tolerance:	in range of 10^3 Gy(Si)
Dynamic range for neutron fluence:	6 orders of magnitude
Dynamic range for gamma:	3 orders of magnitude

Gamma and neutron radiation should be monitoring in real-time in each ATCA crate and in various places where other electronics is installed.

When allowed dose or fluence is violated alarm should be triggered (IPMI message).

All measured data should be stored in main data base for further analysis