Downconverter

Cavity Field Detection for the ATCA System

F.Ludwig, M.Hoffmann, DESY
K.Suchecki, WUT-ISE
H. Piel Cryoelectra GmbH

Outline

- Cavity Field Detection Requirements
- Downconverter for LLRF
- Achieved Performance from FLASH studies
- Main and Booster Section Downconverter
- Injector and 3rd Harmonic Section Downconverter
- Most important problems
- Automated Drift Calibration
- Project status and plans

Cavity Field Detection Requirements

- Requirements for different LLRF-stations:

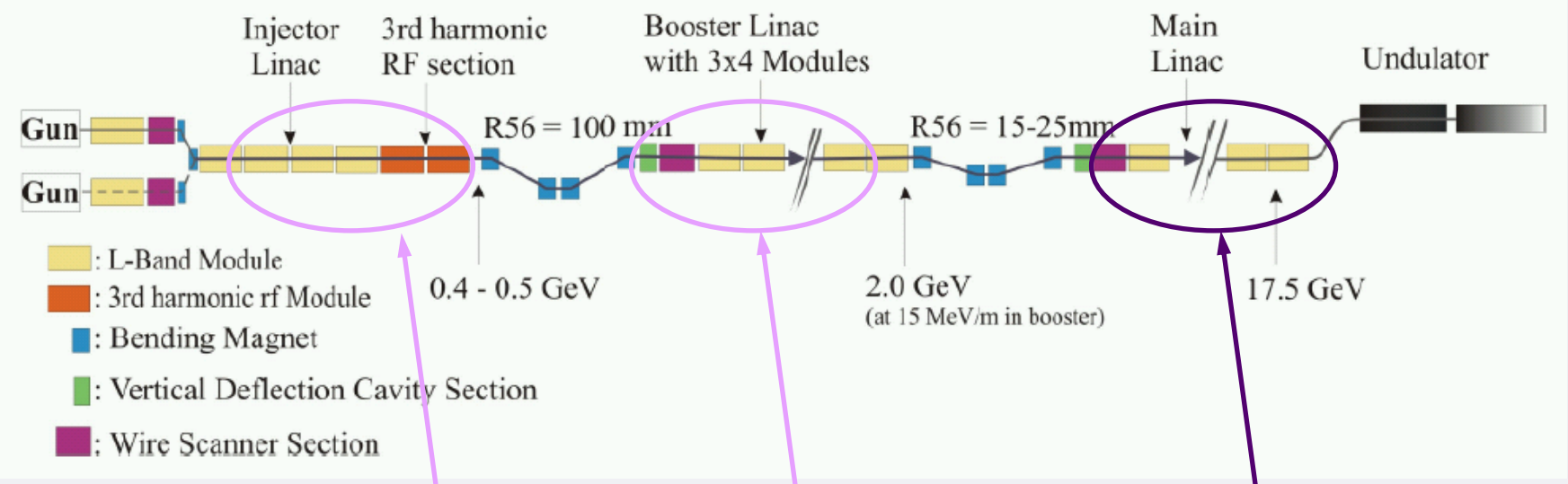

Amplitude and Phase stability : $f_{CAV} = 1.3GHz$

$\Delta A / A_{rms} = 0.01\%,$ $\Delta\varphi_{rms} = 0.01\,deg$

$\Delta A / A_{rms} = 0.03\%,$ $\Delta\varphi_{rms} = 0.03\,deg$

$\Delta A / A_{rms} = 0.1\%,$ $\Delta\varphi_{rms} = 0.1\,deg$

(ACC4,ACC5,ACC6)

Downconverter for LLRF

- Relevant sections for the detection of the cavity field :

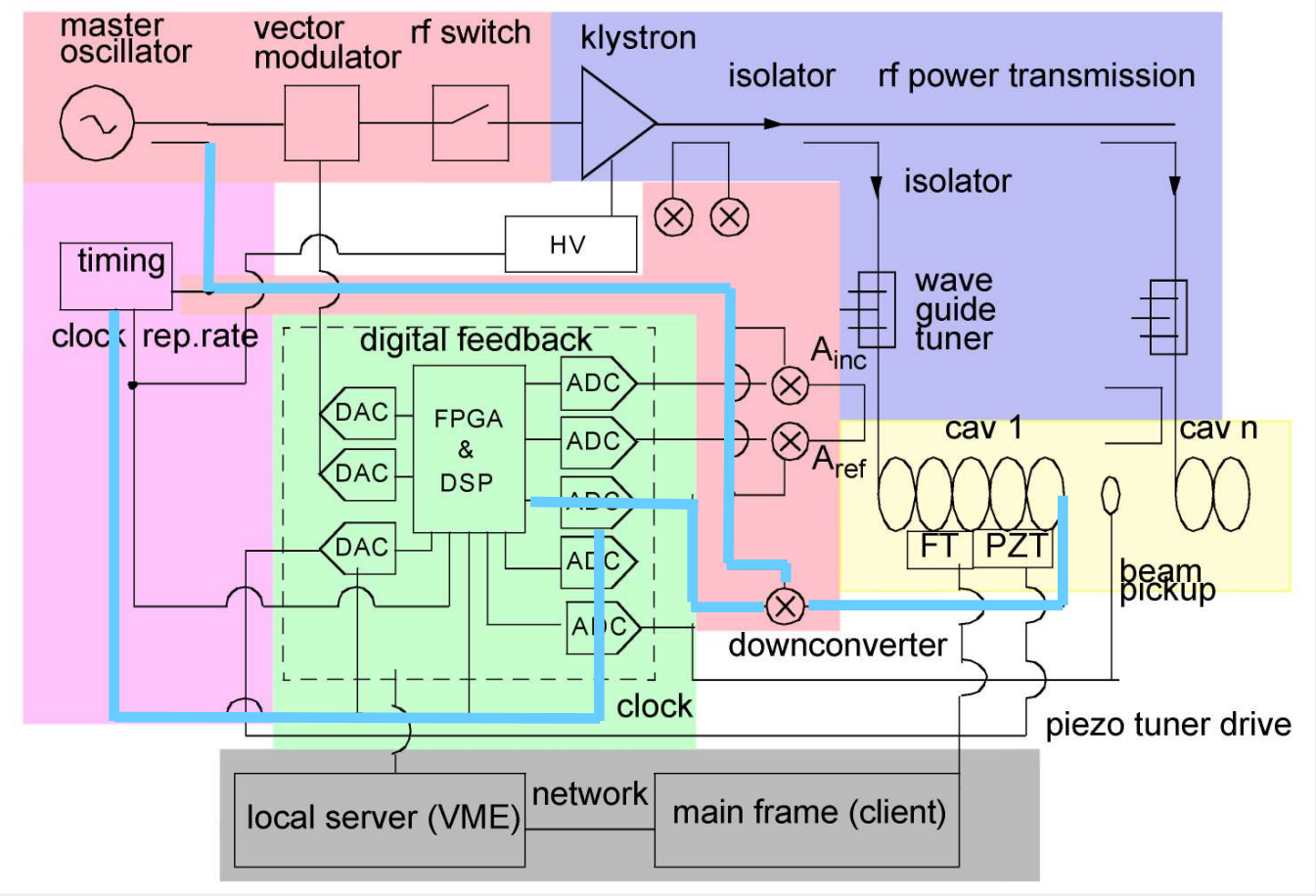

- Reference
- Mixer
- ADCs
- Timing

Downconverter for LLRF

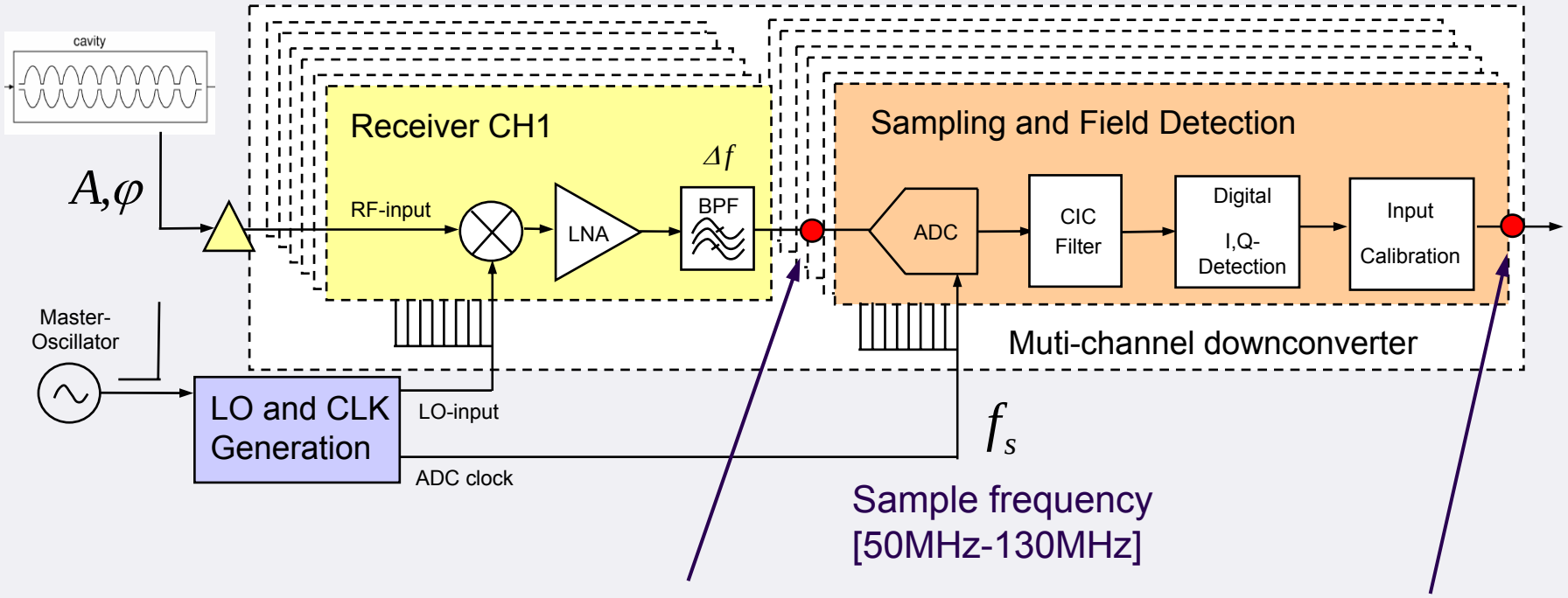

Sample frequency [50MHz-130MHz]

Intermediate frequency [10MHz, 50MHz]: f_{IF}

Single cavity field in amplitude and phase

Achieved Performance from FLASH studies

- Multi-channel downconverter :

8 channel Gilber-mixer receiver VME based
+ SIMCON DSP (14-bit ADCs) VME based

Stability results (single channel) :

- Shortterm, bunch-to-bunch (800us) :
  $\Delta A / A_{rms} = 0.015\%, \quad \Delta\varphi_{rms} = 0.0092\ deg$
- Midterm, pulse-to-pulse (10min) :
  $\Delta A / A_{rms} = 0.016\%, \quad \Delta\varphi_{rms} = 0.0147\ deg$
- Longterm, drifts (1hour) :
  $\Delta A / A_{pkpk} = 0.09\%, \quad \Delta\varphi_{pkpk} = 0.05\ deg$

θ_A = 2e-3/°C, θ_P = 0.2°/°C
(Need for drift calibration)

- Pulse-to-Pulse Beam Stability :

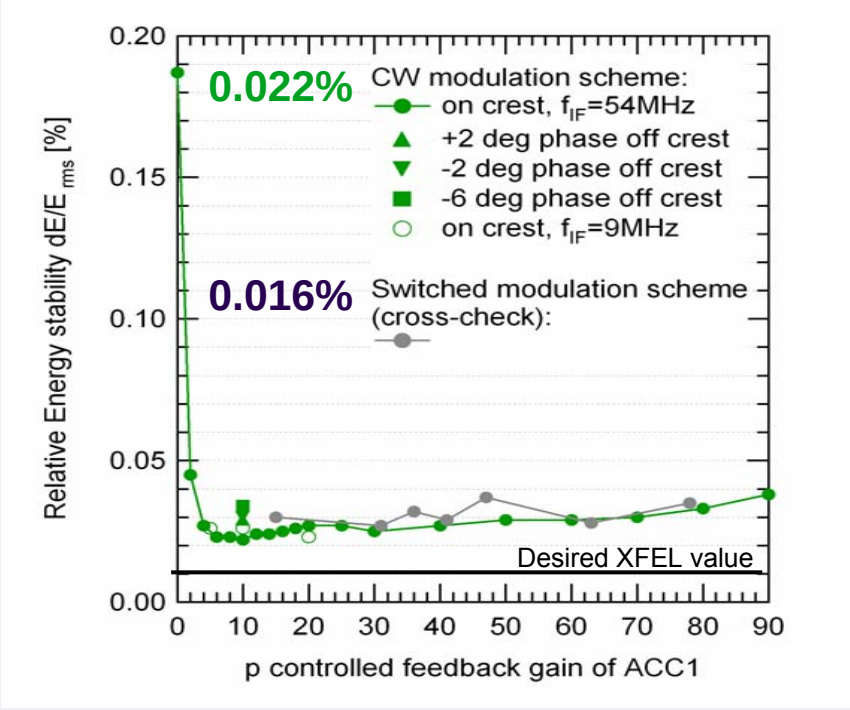

Main and Booster section requirements are fulfilled - Injector and 3rd harmonic requirements only nearly.

Can the ATCA system fulfill this too?

Main and Booster Section Downconverter

- **Rear Transition Module (RTM)**

Number of Receivers : 4x8, 4x12 or 4x16 depending on receiver cell size and PCB routing

Cavity Signals (24 channels)
forward, reflected, probe

Reference (3 channels)
Klystron Linearization (3 channels)

LO Generation & Distribution

- mixer method
- VCOs
- Laser to RF

Local Oscillator

RF-Reference

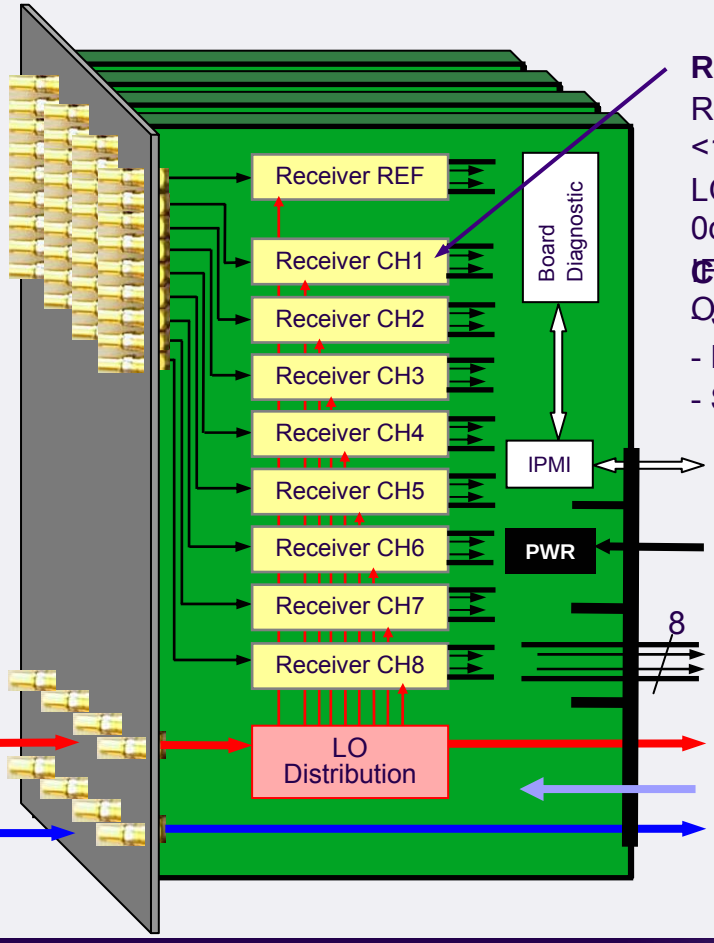

Receiver : LT5527 (Gilbert-Mixer)
RF: 1300MHz , <10dBm
LO: [1310MHz, 1350MHz], 0dBm
Control : [10MHz, 50MHz], diff.
Outputs
- Signal Diagnostic (Level, cable,PWR)
- Frontend Attenuator
- Slow Timing Drift Calibration

X 4

Frontend ADCs

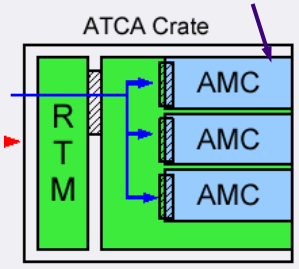

RF-Calibration Signal

Injector and 3rd Harmonic Section Downconverter

- Rack Layout :

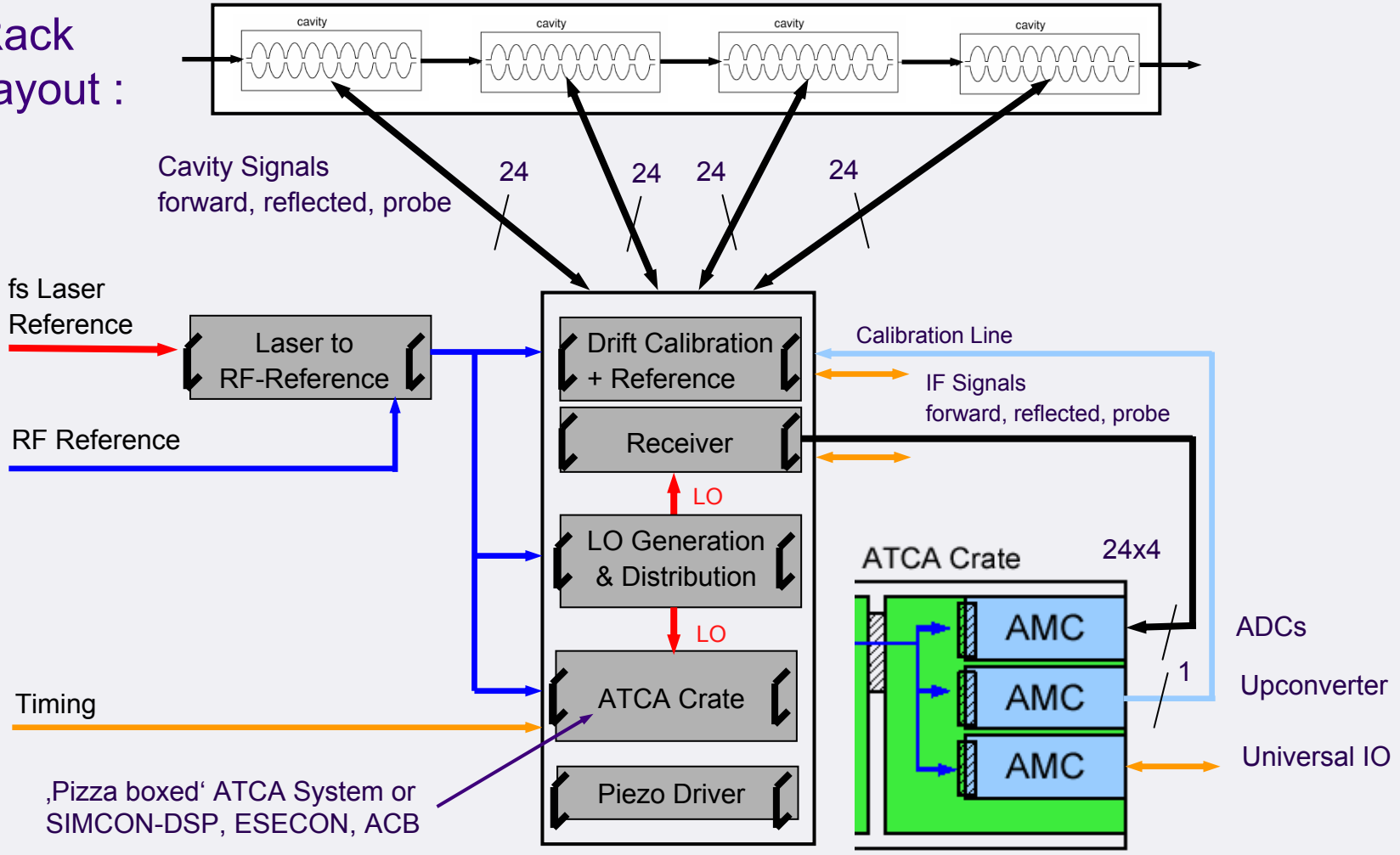

Injector and 3rd Harmonic Section Downconverter

- High Level Downconverter

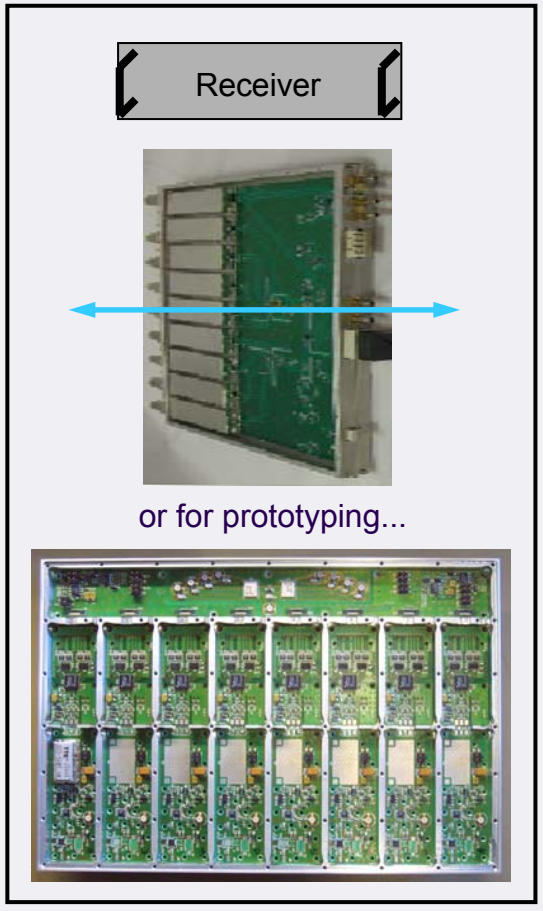

1.3GHz Injector Receiver :
Passive high level mixer

RF:	1300MHz	, 20dBm
LO:	1313MHz,	20dBm
IF :	13MHz (propose), single ended	

3.9GHz Injector Receiver :
Passive high level mixer

RF:	3900MHz	, 20dBm
LO:	3939MHz,	20dBm
IF :	39MHz (propose), single ended	

Features :

- Needs more than +20dBm LO Power
- Required space more than VME sized (Stripline design, directional coupler...)
- Amplitude/Phase noise <0.01%, <0.01 deg
- Easy servicing and investigation of LO and IF
- Individual Power Supplies

Automated Drift Calibration

A drift compensation is needed to compensate drifts from

- Cavity pickup cables (4 module) $5\,fs\,m^{-1}K^{-1}, \pm 125 fs\,K^{-1}\,(\pm 25m), \Delta T \approx 1K$
- Downconverter (mixer) θ_A = 2e-3/°C, θ_P = 0.2°/°C
- LO generation (dividers, amplifiers, filters) (Injector)
- ADC CLK generation (timing system, less critical)

to have a robust machine operation.

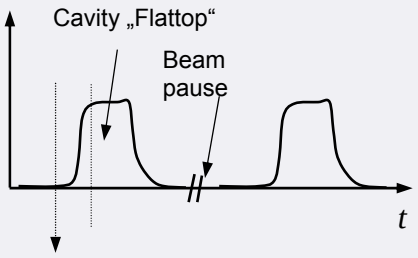

1) Injection of the reference signal :

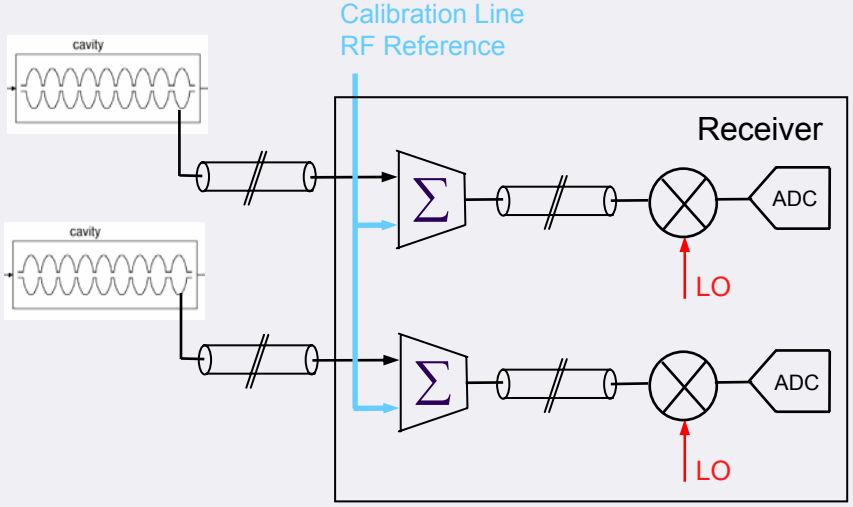

2) Reflection at the cavity :

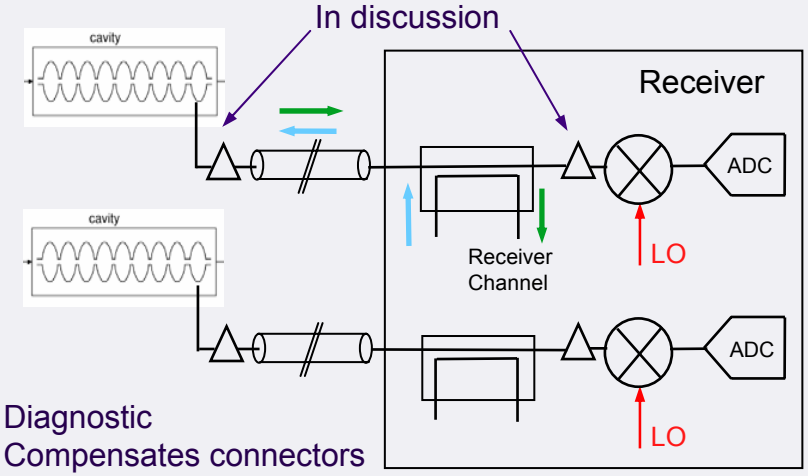

+ Diagnostic
+ Compensates connectors

Problems to be solved

- Distribution within crates :

  - Interference from high-speed digital circuits

  - RTM | ATCA | AMC diff. / single ended interfacing ?

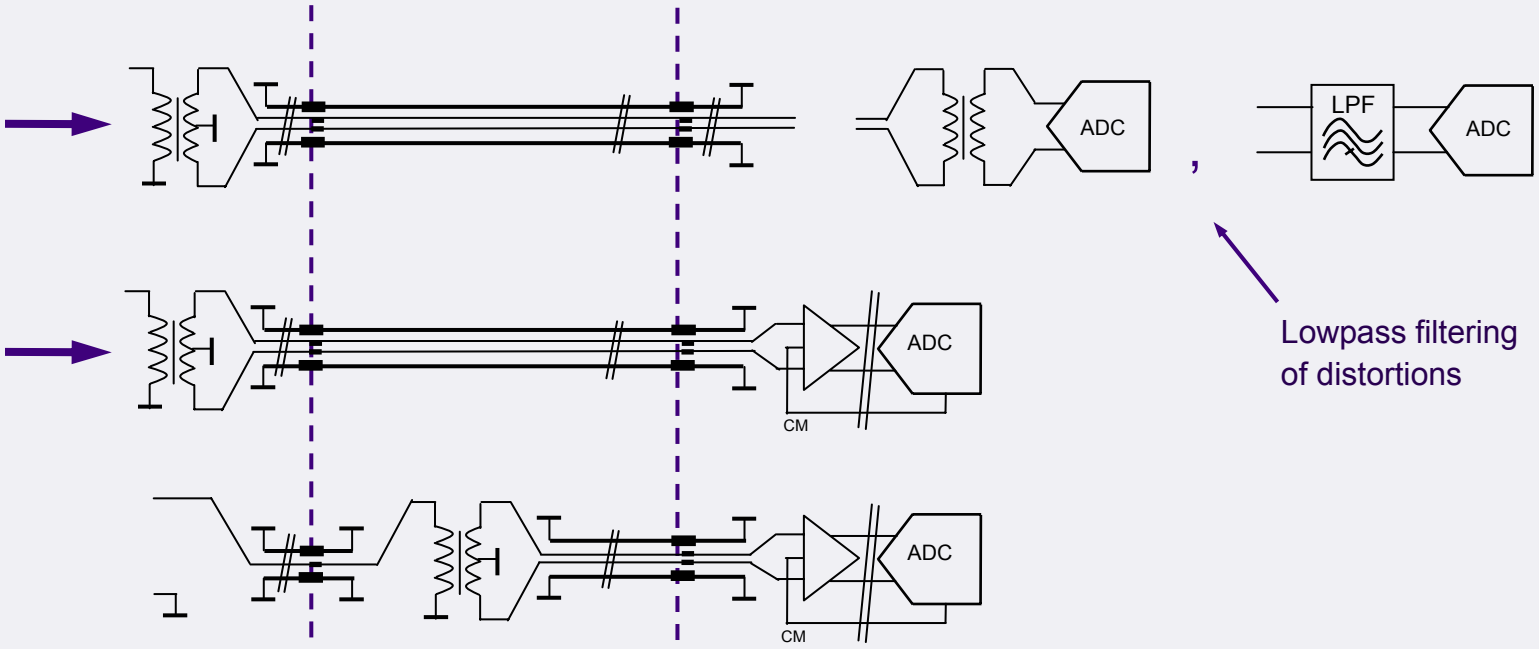

Lowpass filtering
of distortions

Project status and plans

RTM module

1st Version : 4x8, 4x12or 4x16 raw channels, Design, Prototype, Performance Tests (05/08)
2nd Version : incl. IPMI + board diagnostic (09/08)
Drift calibration frontend (couplers based on transformers)
Manpower : H.Piel, Cyroelectra GmbH

Automated Drift calibration

1st Version : "Proof of principle" using discrete Hardware incl. Software (02/08)
2st Version : Design calibration and reference crate (10/08)
3st Version : Performance comparison for the Injector in Lab & Injector (10/08)
Manpower : F.Ludwig/2, G.Möller, W.Koprek, W.Jalmzna (DESY), Fermilab ?

LO-Generation and Distribution

1st Version : 1309, 1354 LO-Generation Prototype (11/07) ok
2st Version : 3x1.3GHz Reference Multiplication (Design, Prototype,Tests) (05/08) ???
3st Version : LO Generation Crate (Design,Tests) (05/08)
Manpower : H.Weddig, K. Czuba, (DESY), Fermilab ?

Thanks for your attention.