Optical synchronization developments at FLASH

Cezary Sydlo
on behalf of the FLASH LbSyn Team

21 August 2012
1st ARD Workshop ST3
“ps-fs Electron and Photon Beams”

HELMHOLTZ
ASSOCIATION

DESY

Outline

- Optical synchronization system overview
- Developments and improvements at FLASH
- LinkBox
- Beam Arrival Monitor
- Laser-2-RF

Optical synchronization system overview

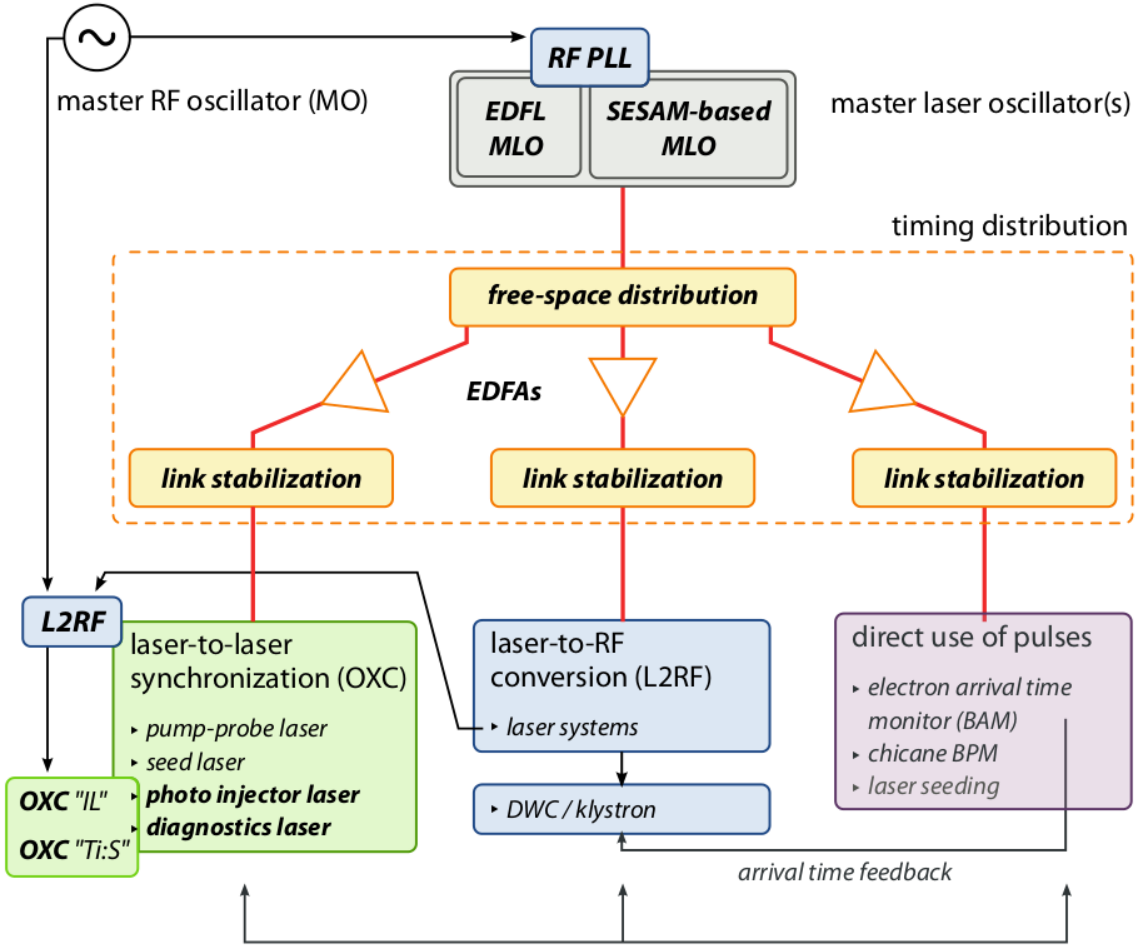

Timing reference
- mode locked laser
- low-noise
- phase-locked to MO

Timing distribution
- stabilized fiber links
- sub-10fs accuracy

End stations
- external lasers
- RF stations
- BAMs

Desired point-to-point stability ~ 10 fs

Main issue: robustness, stability and maintainability ⇒ Prototype at FLASH

Courtesy: S. Schultz

Synchronization developments at FLASH

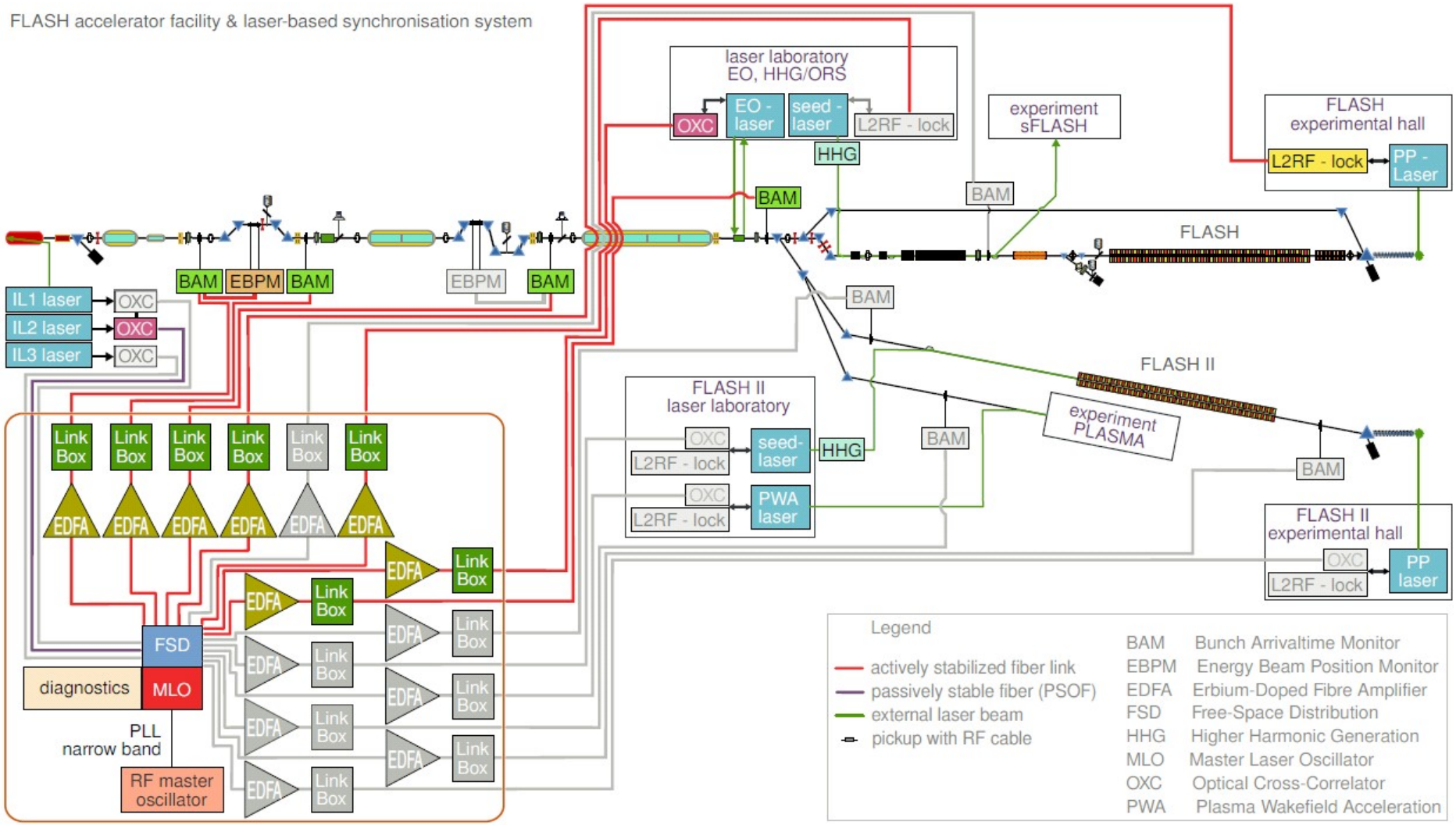

Courtesy: M.K. Bock

Developments and improvements at FLASH

- EDFAs
  - Low-noise driver for laser diodes, reduced nonlinearities & optical pulse distortions, dispersion compensation for free-space distribution
- **Free-space optics**
  - Avoiding state-of-polarization changes at mirrors, reducing optical reflections, precise balanced detector electronics, reproducibility & maintainability
- Link
  - Higher-order chromatic dispersion, Polarization Mode Dispersion
- Free-space distribution
  - Improved optical design, control points
- Standardization
  - Integrated LinkBox electronics, facilitate interchangeability and maintainability
- **40GHz Beam Arrival Monitor**
- **Laser-2-RF**

Current design status of Link Box V3.2

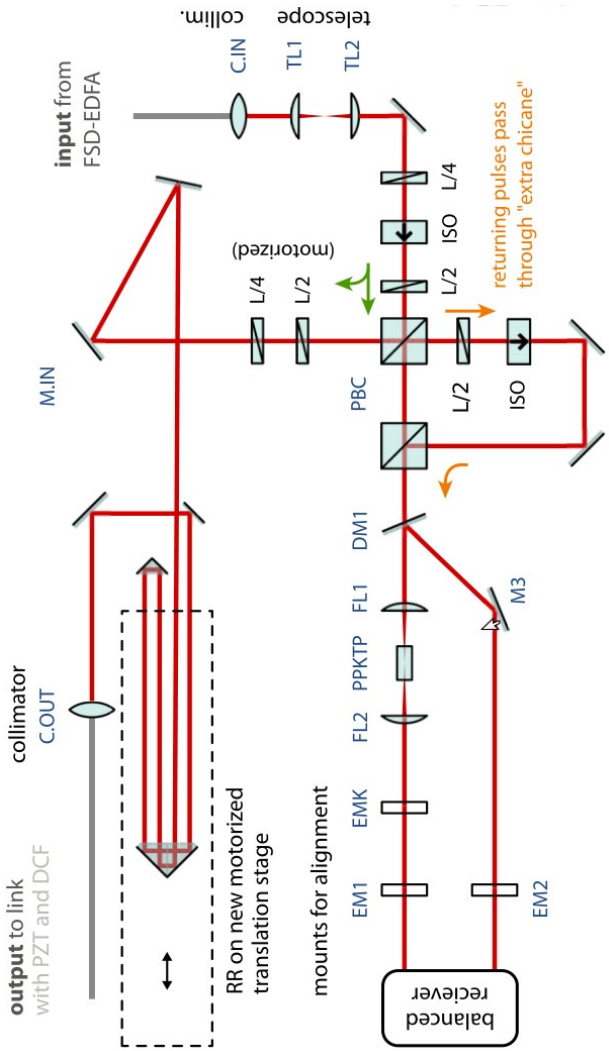

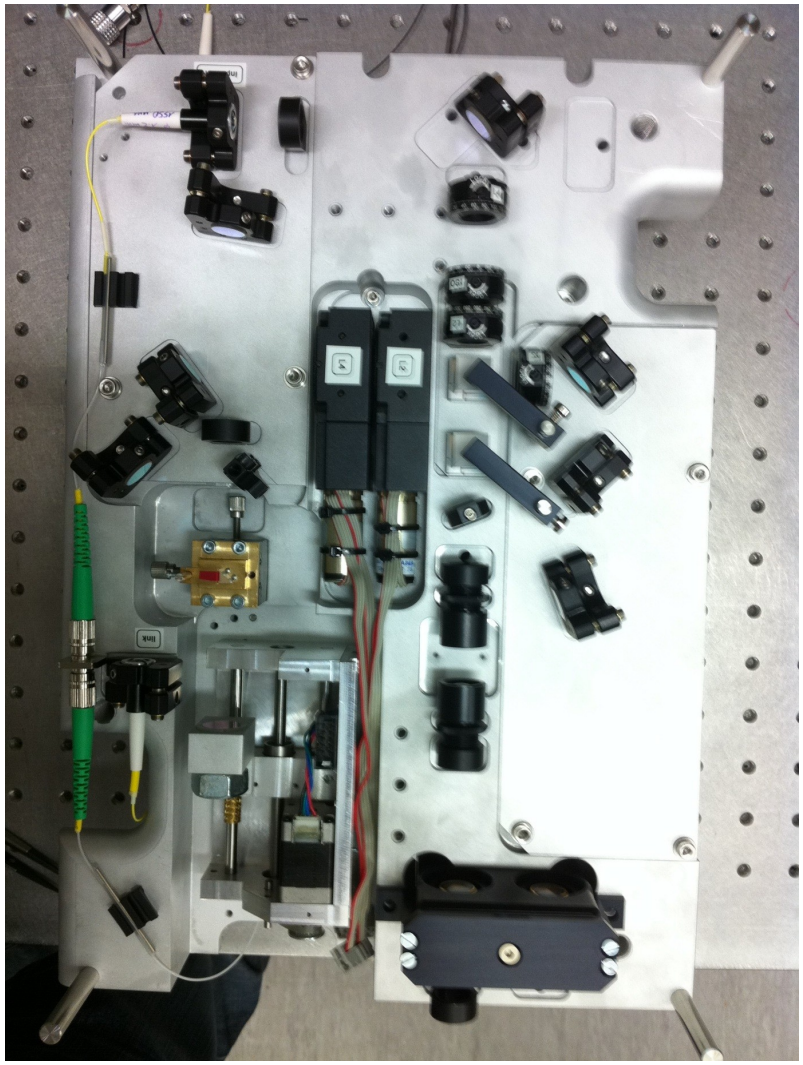

Courtesy: M.K. Bock, S. Schultz & T. Lamb

40GHz Beam Arrival Monitors

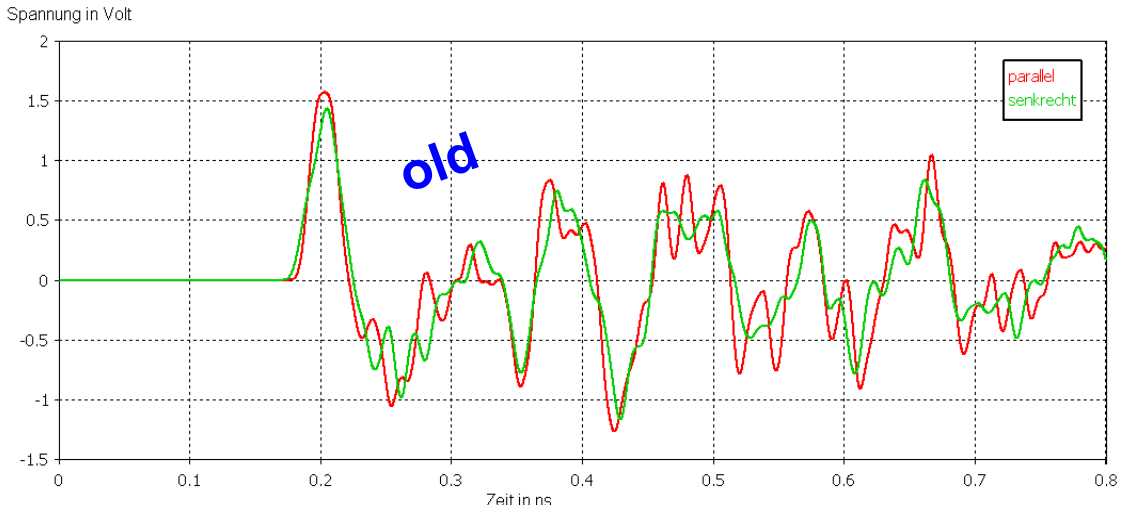

Current BAM design:

- Bandwidth limited by 10 GHz
- Strong ringing

New BAM design:

- Bandwidth ≈ 40 GHz
- Low ringing
- Detection of bunches with lower charges (down to 20pC)

Courtesy: A. Angelovski (TU Darmstadt), A. Kuhl

40GHz Beam Arrival Monitor installed in FLASH

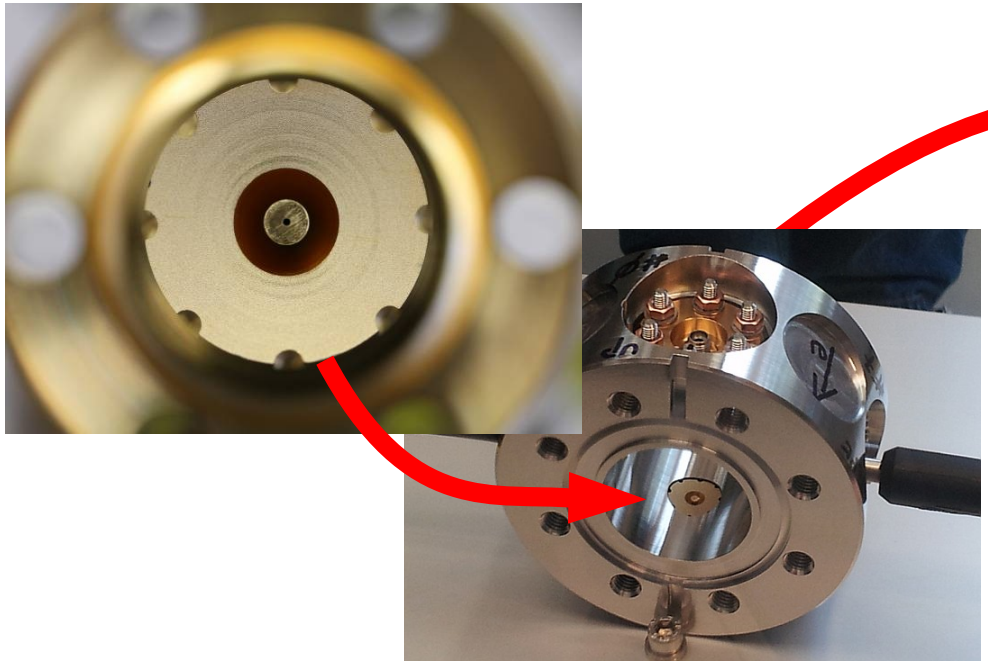

Pickup & BAM body preparation for measurements in Low-Particle-Area
Courtesy: J. Kruse (MDI)

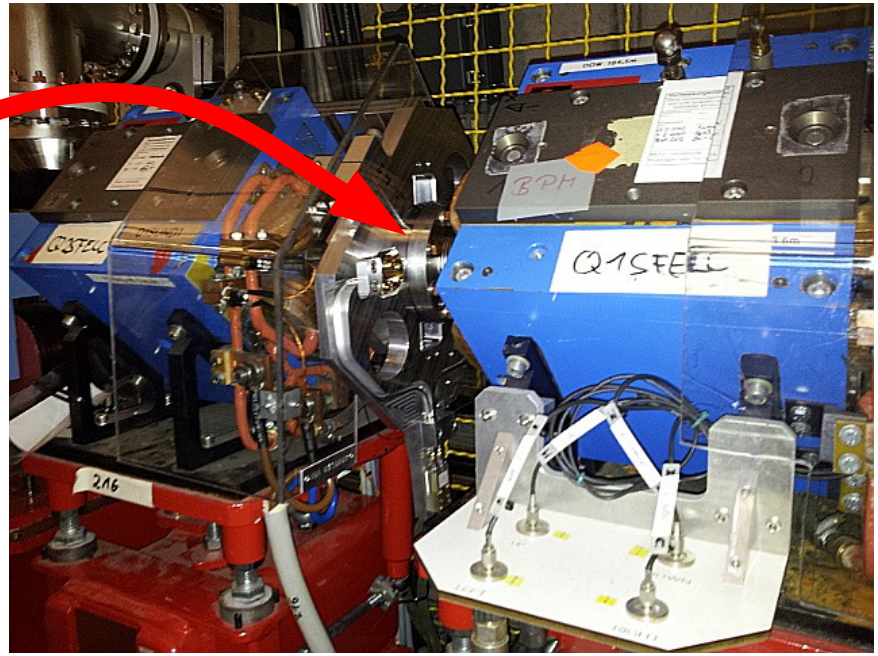

BAM installed in FLASH at 185m

- New 40GHz BAM lives ☺
- Recording of “in-situ” 40 GHz signal in preparation

Laser-to-RF conversion

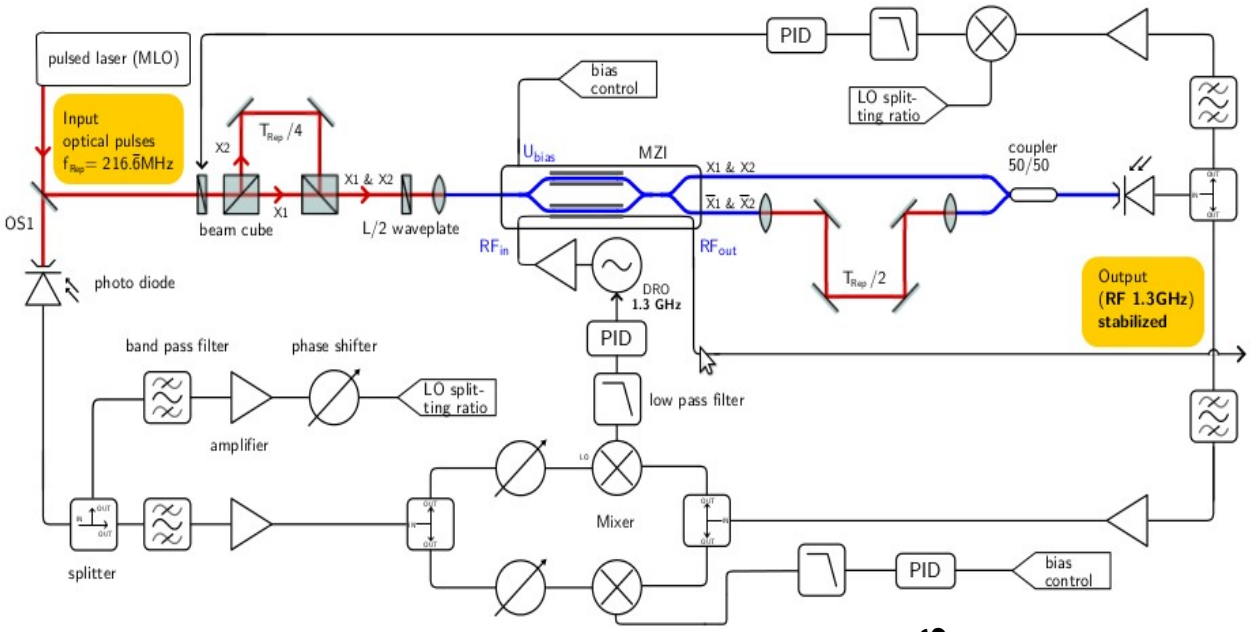

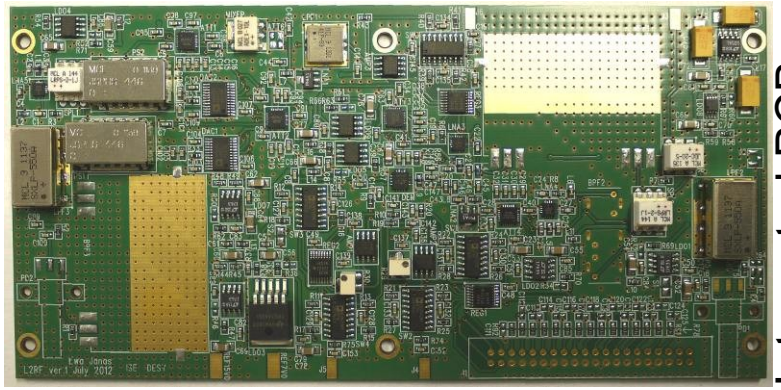

Integrated PCB
Courtesy: E. Janas

Prototype

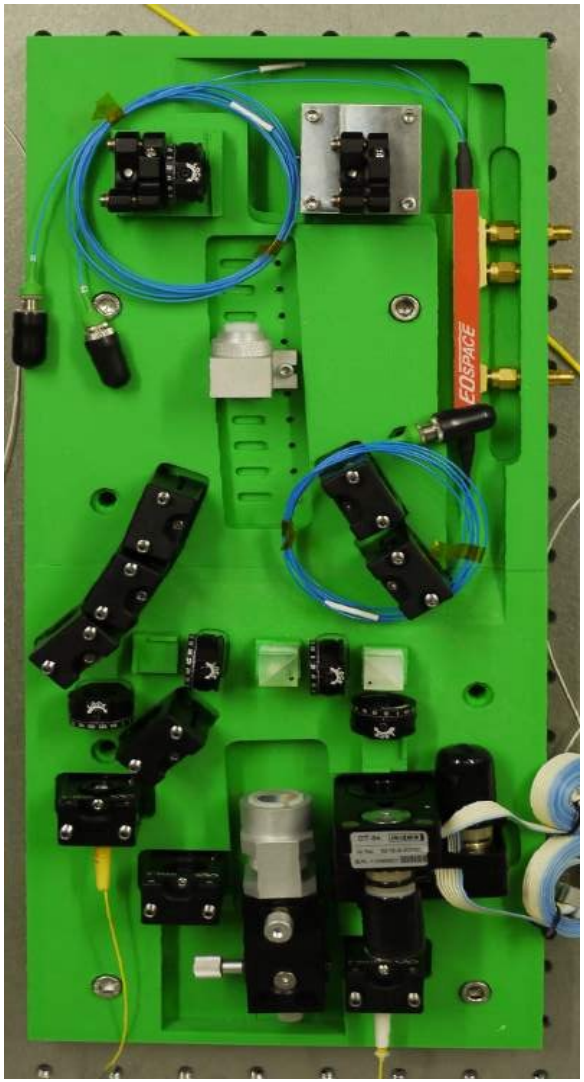

T. Lamb et. al. "Femtosecond stable laser-to-RF phase detection using optical modulators", 33rd FEL 2011 Shanghai, China, Aug., 2011

Laser-to-RF conversion measurements

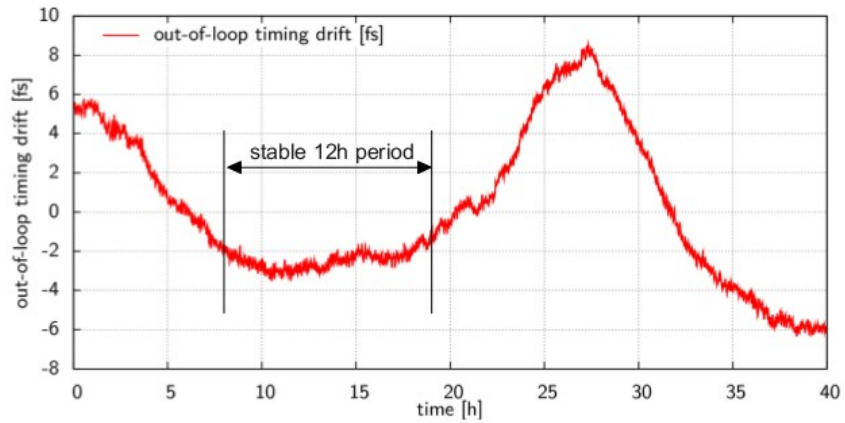

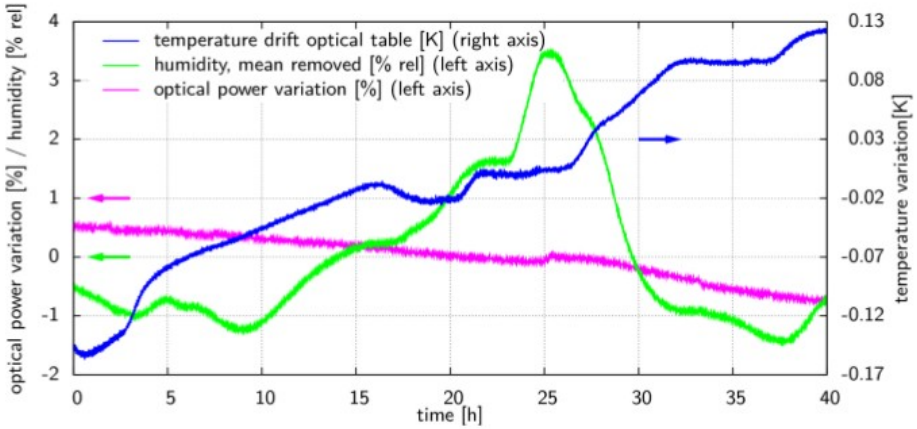

- Very sensitive K = 1.3mV/fs
- 3.8fs rms & 14.9 fs pp achieved out-of-loop (40h)
- drifts correlated to humidity
- 2.44 fs integrated jitter out-of-loop (10 Hz to 1 MHz)
- System integration started
- Integration into FLASH scheduled

Optical synchronization developments at FLASH

Thank you