Search for electroweak production of gauge mediated supersymmetry with photons at CMS

Johannes Schulz, Christian Autermann, Lutz Feld

I. Physikalisches Institut B, RWTH Aachen

November 18, 2015
HGF Alliance Meeting

RWTH AACHEN UNIVERSITY

DFG

GEFÖRDERT VOM

Bundesministerium
für Bildung
und Forschung

Content

1. Motivation
2. Objects and Selection
3. Background Prediction
4. Results and Interpretation
5. Summary

Theoretical Motivation

Search for SUSY in $\gamma + \not{E}_T$ final states in the context of **Gauge Mediated Supersymmetry breaking** (GMSB)

- Gravitino $\widetilde{G}$ is Lightest Supersymmetric Particle (LSP)
- Lightest $\widetilde{\chi}_1^0$ is Next-to-LSP (NLSP)
- Bino NLSPs decay with high probability to $\gamma+\widetilde{G}$

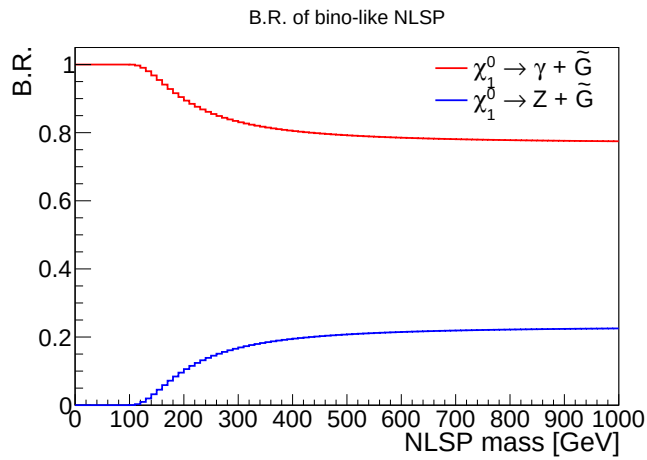

arXiv:0911.4130

R-Parity Conservation

- LSPs are stable and weakly interacting, leading to missing transverse energy ($\not{E}_T$)

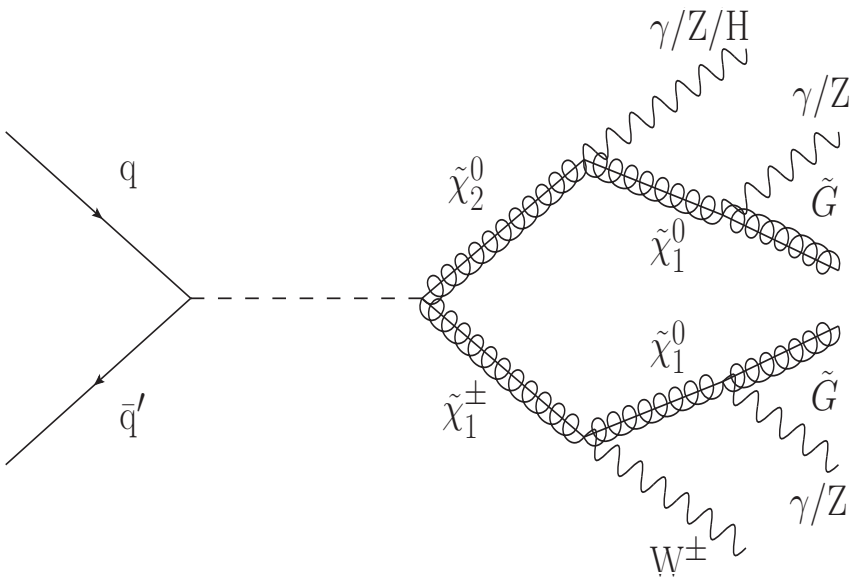

Main properties of the analyzed final states:

- GMSB:
  at least one **photon**
- Stable LSP:
  Missing transverse energy $\not{E}_T$
- Electroweak production:
  moderate hadronic activity H_T

"Parked Data": New Phase Space accessible

"Parked Data":

- Dataset with low trigger thresholds
- Direct availability of data limited by data processing
- Free storage space available
- Reconstructed after data taking in 2012
- $\int \mathcal{L}\, dt = 7.4\ fb^{-1}$, $\sqrt{s} = 8$ TeV

→ Higher sensitivity to **electroweak production** and **small mass differences** of the lightest gauginos

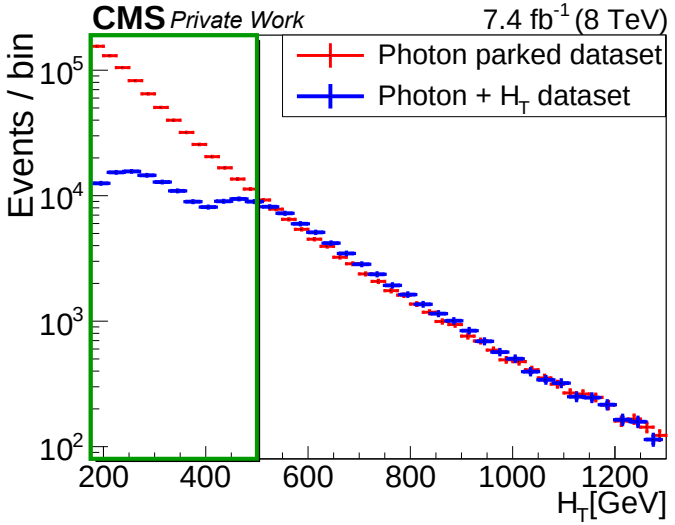

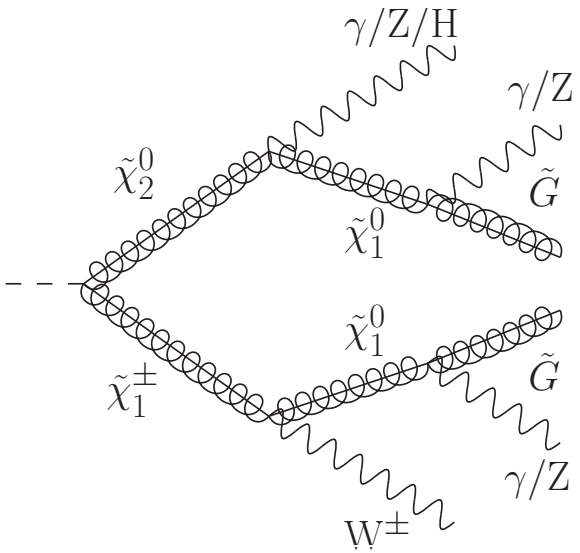

analysis	dataset	trigger requirements
this γ analysis (SUS-14-016)	photon parked	$p_T(\gamma) > 30$ GeV $\not{E}_T > 25$ GeV
γ + jets (SUS-14-004)	photon + H_T	$p_T(\gamma) > 70$ GeV **$H_T > 400$ GeV**

→ **Low H_T** phase space with **high statistics** now accessible due to the parked dataset

Trigger Efficiency

→**Trigger efficiency** for data-simulation comparison, signal acceptance, systematics:

- **Signal** trigger: isolated γ with $p_T > 30$ GeV + $\not{E}_T > 25$ GeV
- **Photon baseline** trigger: isolated γ with $p_T > 30$ GeV
- $\not{E}_T$ **baseline** trigger: $\not{E}_T > 100$ GeV

$$\text{e.g.: } \varepsilon_{\not{E}_T\text{-req.}} = \frac{\#\text{Events triggered by signal and photon baseline trigger}}{\#\text{Events triggered by photon baseline trigger}}$$

⇒**Overall trigger efficiency:** $\varepsilon_{\text{trigger}} = \varepsilon_{\not{E}_T\text{-req.}} \cdot \varepsilon_{\gamma\text{-req.}} = (86.5^{+1.0}_{-1.3}(\text{stat.}))\ \%$

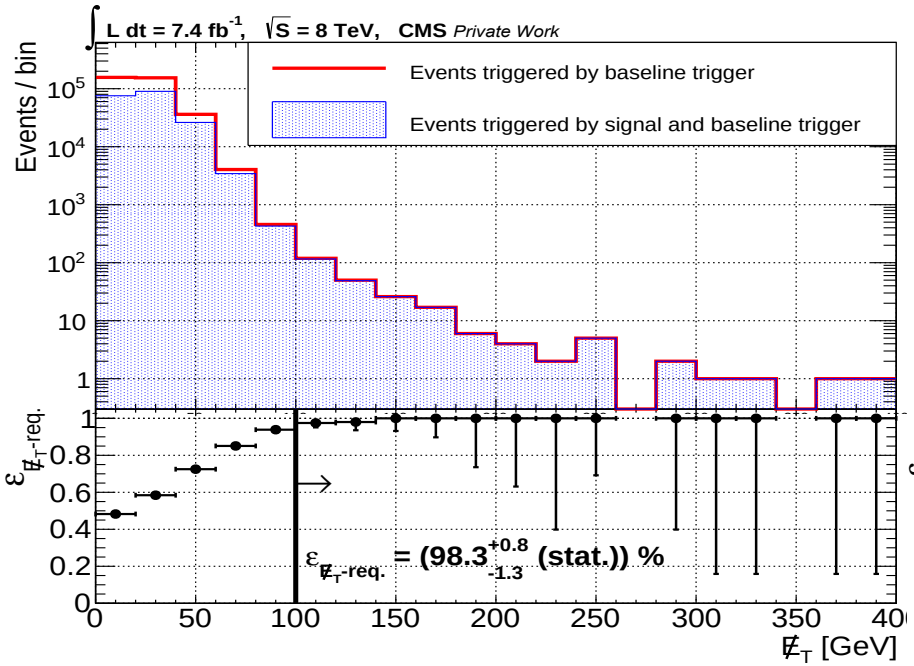

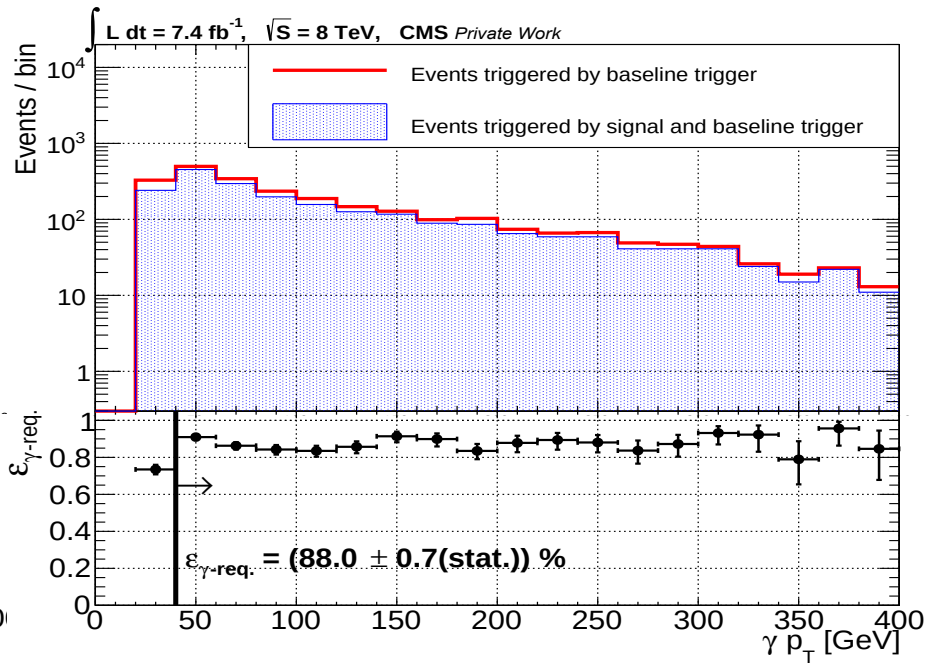

Object Definition

Photon:

- No clusters of hits in the tracker ($N_{Pixelseed}$)
- Low hadronic energy fraction
- Photon-like showershape in ECAL
- Well isolated
- $p_T > 30$ GeV
- $|\eta| < 1.44$ (ECAL barrel)

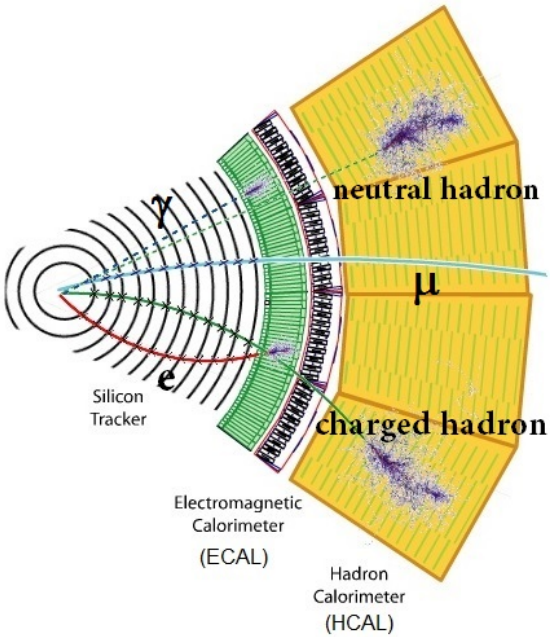

$\not{E}_T$ significance:

- Calculation based on likelihood ratio using the knowledge about energy resolution of the reconstructed particles (arXiv:1106.5048)
- The higher the $\not{E}_T$ significance, the more likely the $\not{E}_T$ is due to particles not interacting with the detector

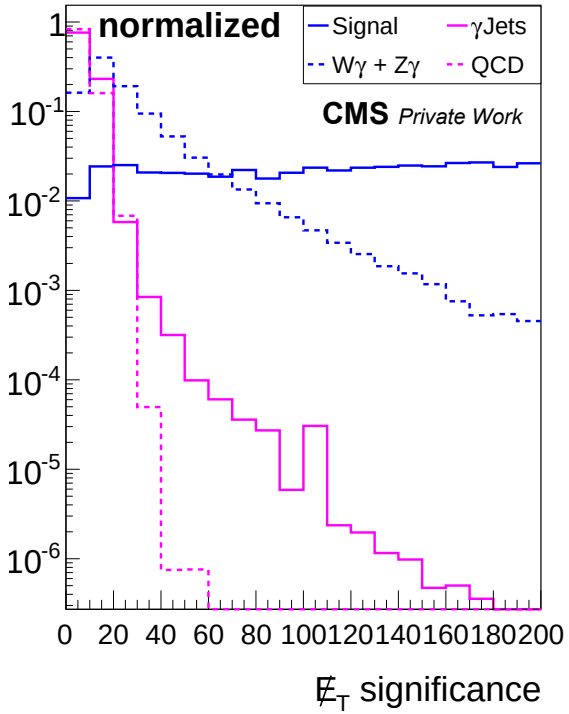

The Analysis

- **Preselection:**
  - At least one γ with $p_T > 40$ GeV
  - $\not{E}_T > 100$ GeV
  - $H_T > 100$ GeV

The Analysis

- **Preselection:**
  - At least one γ with $p_T > 40$ GeV
  - $\not{E}_T > 100$ GeV
  - $H_T > 100$ GeV

- **Signal region (SR):**
  - $\not{E}_T$ significance > 80
  - $M_T(1\text{st } \gamma, \not{E}_T)^* > 300$ GeV

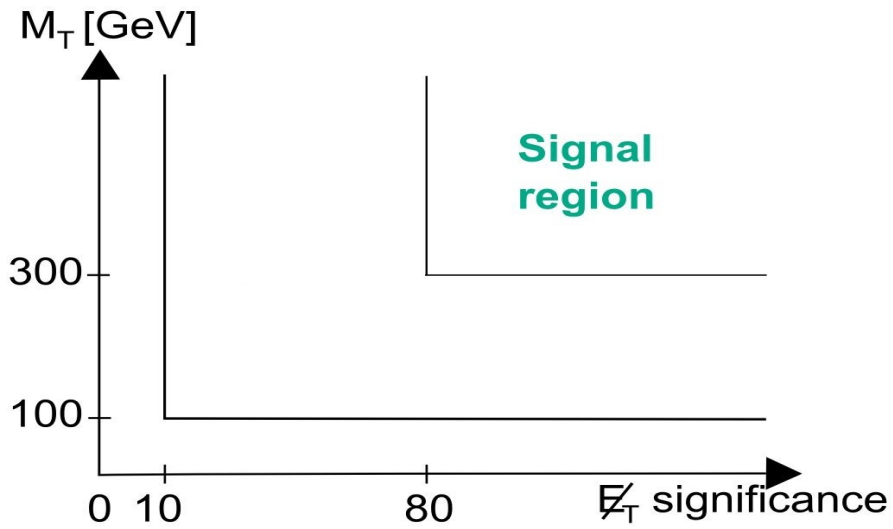

$^*M_T = \sqrt{2E_T^{\gamma}\not{E}_T(1-\cos(\Delta\Phi(\gamma,\not{E}_T)))}$

The Analysis

- **Preselection:**
  - At least one γ with $p_T > 40$ GeV
  - $\not{E}_T > 100$ GeV
  - $H_T > 100$ GeV

- **Signal region (SR):**
  - $\not{E}_T$ significance > 80
  - $M_T(1\text{st } \gamma, \not{E}_T)^* > 300$ GeV

- **Control region (CR):**
  - $\not{E}_T$ significance > 10
  - $M_T(1\text{st } \gamma, \not{E}_T)^* > 100$ GeV
  - SR excluded

$\rightarrow$ Background estimation

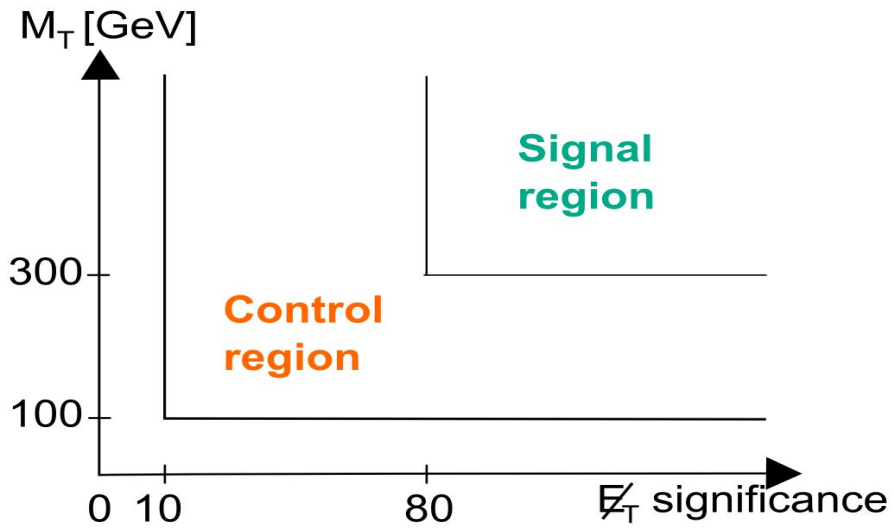

*$M_T = \sqrt{2E_T^{\gamma}\not{E}_T(1 - \cos(\Delta\Phi(\gamma, \not{E}_T)))}$

Background Prediction - dominant Backgrounds

Photon Radiation in Vector Boson Production (Vγ) and Photon+Jet Production (γJets)

Vγ

- Production of genuine photons
- Production of neutrinos $\rightarrow$ missing transverse energy

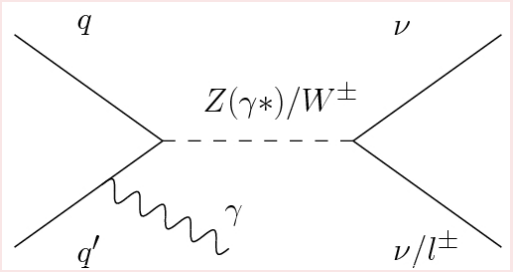

γJets

- Production of genuine photons, high cross-section
- Missing transverse energy due to mismeasurements and jet energy resolution

$\rightarrow$ Estimated by **simultaneous** fit to data in control region (next slide)

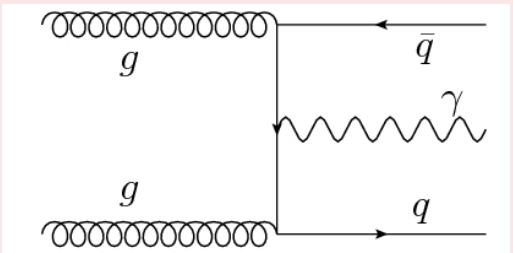

Electrons misidentified as Photons (e$\rightarrow \gamma$)

- Production of electrons that can be misidentified as photons
- W, top backgrounds

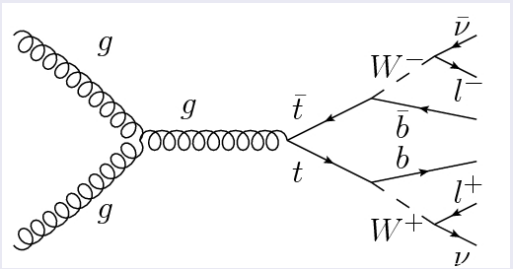

Background Prediction

MC normalization in control region for Vγ and γjets:

Backgrounds:

- Vγ (Wγ + Zγ) MadGraph
- γjets MadGraph

Method:

- $\not{E}_T/\sqrt{H_T}$ separates the shapes of Vγ and γjets
- Fix other backgrounds
- Fix total scale
- Vary scales of Vγ and γjets and do χ^2-test

Resulting scale factors:

- Vγ (NLO): 0.94 ± 0.23 (dominant uncert.)
- γJets (LO): 2.20 ± 0.31

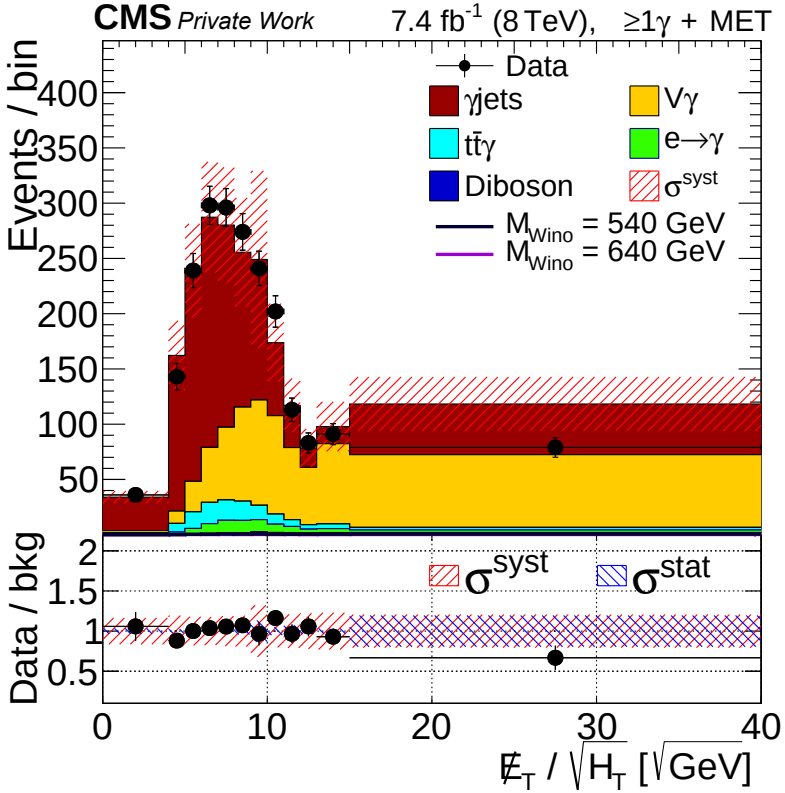

Many cross-checks:

- Uncertainties found to cover any variation in background prediction over different control regions, template variables, and binnings

Subdominant backgrounds:

- e → γ fakes: datadriven
- tt̄γ, Diboson (WW, WZ, ZZ): MC simulation

Results

Results:

$$S_T^\gamma = \sum_i p_T(\gamma_i) + \not{E}_T$$

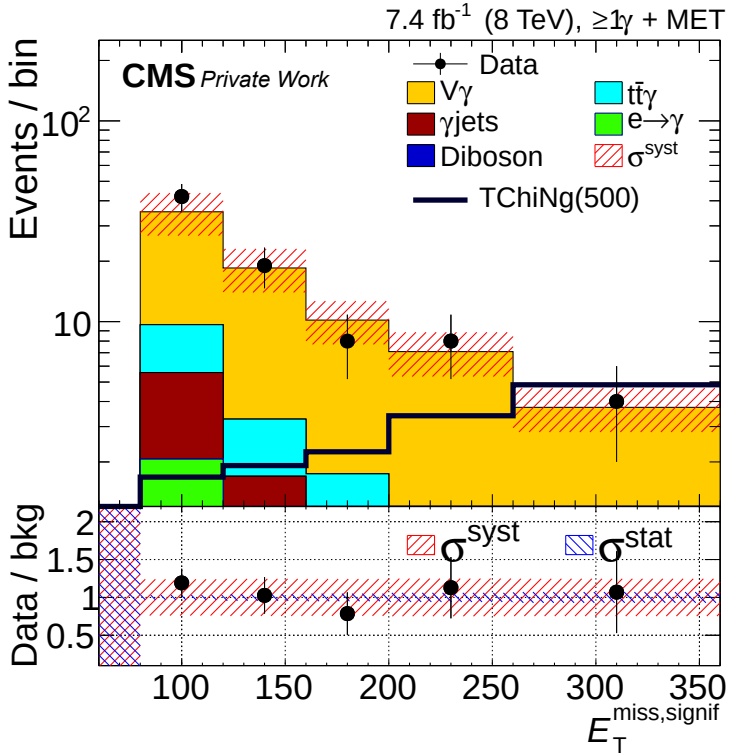

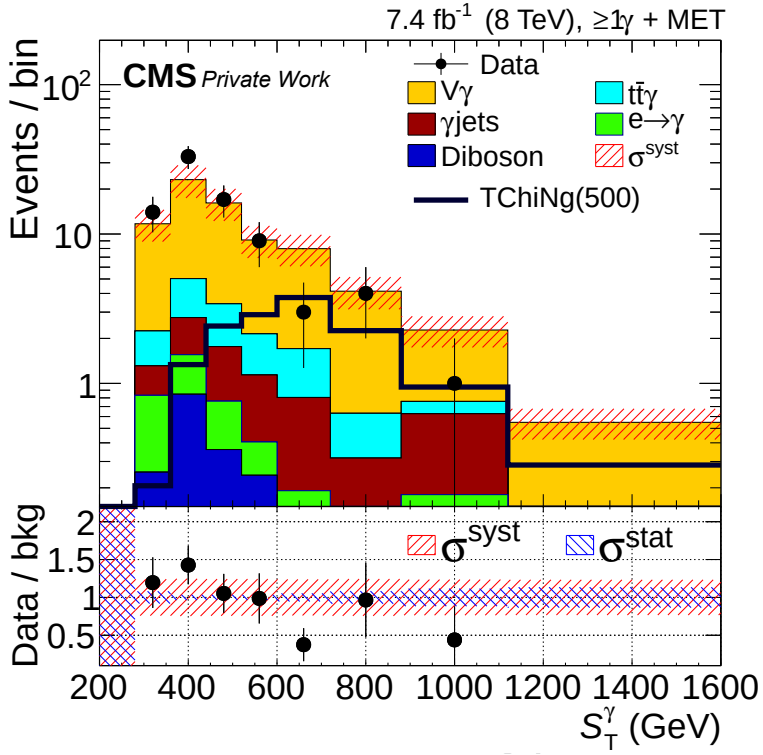

	$\not{E}_T^{\text{miss,signif}} > 200$, $S_T^\gamma > 600$ GeV	$\not{E}_T^{\text{miss,signif}} < 200$, $S_T^\gamma > 600$ GeV	$\not{E}_T^{\text{miss,signif}} < 200$, $S_T^\gamma < 600$ GeV	$\not{E}_T^{\text{miss,signif}} > 200$, $S_T^\gamma < 600$ GeV
Background	5.3 ± 1.2	9.7 ± 1.8	54.3 ± 10.6	5.8 ± 1.3
Data	4	4	65	8

TChiNg

TChiNg:

- Light gauginos nearly mass degenerated → decay chains with soft radiation

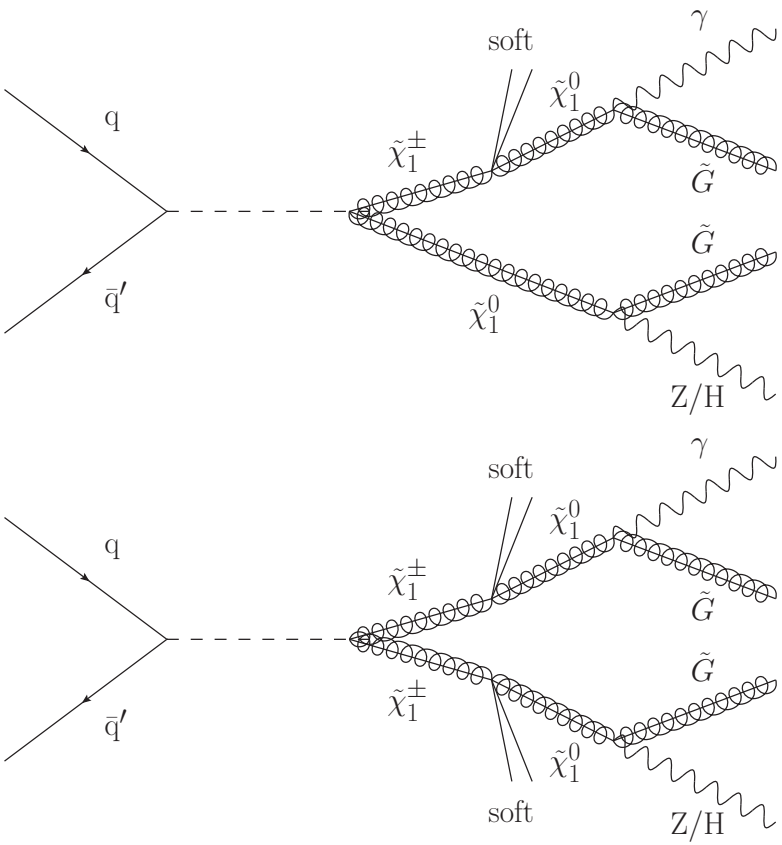

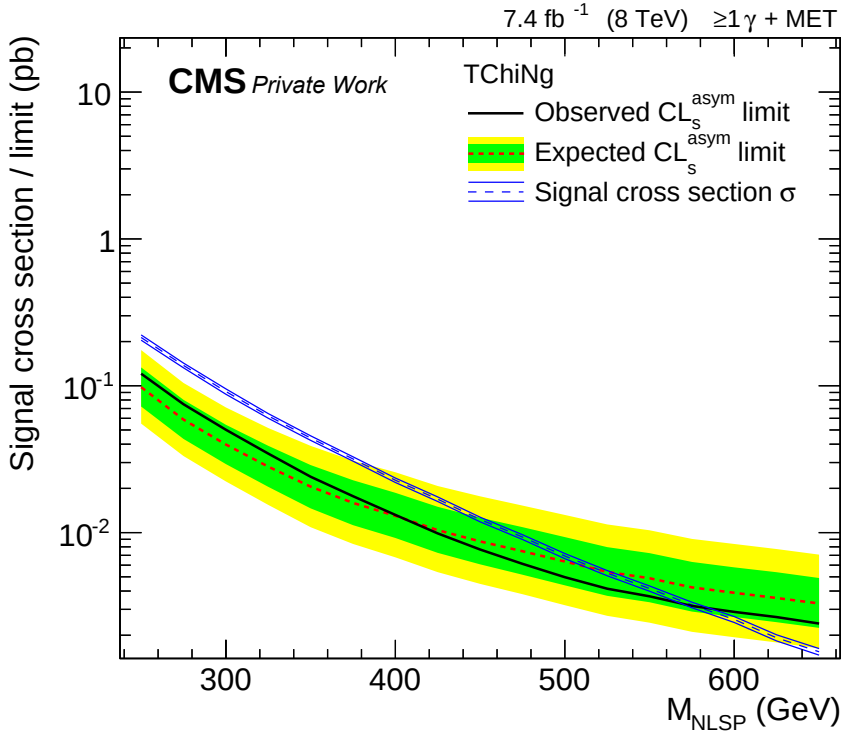

- TChiNg: $M_{NLSP} < 570$ GeV excluded
- Only analysis sensitive to TChiNg → best limit

TChiWg

TChiWg:

- Electroweak production: pp$\rightarrow \chi_2^0+\chi_1^\pm \rightarrow \gamma + W$, χ_1^0 and $\chi_1^\pm$ mass degenerated

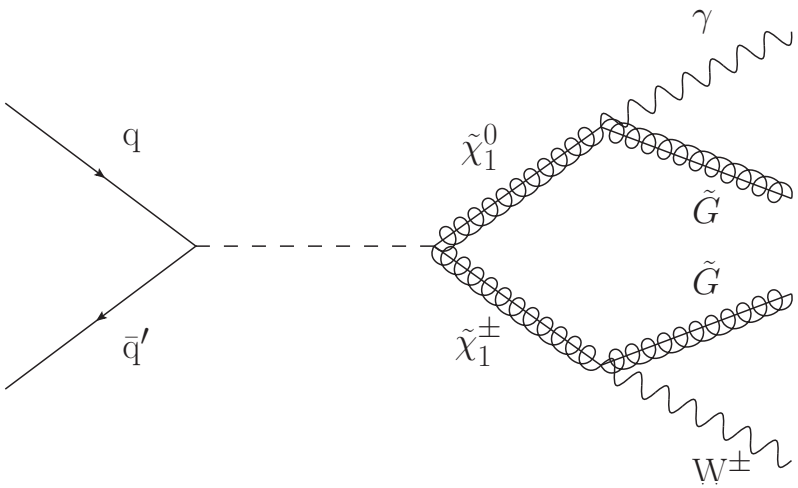

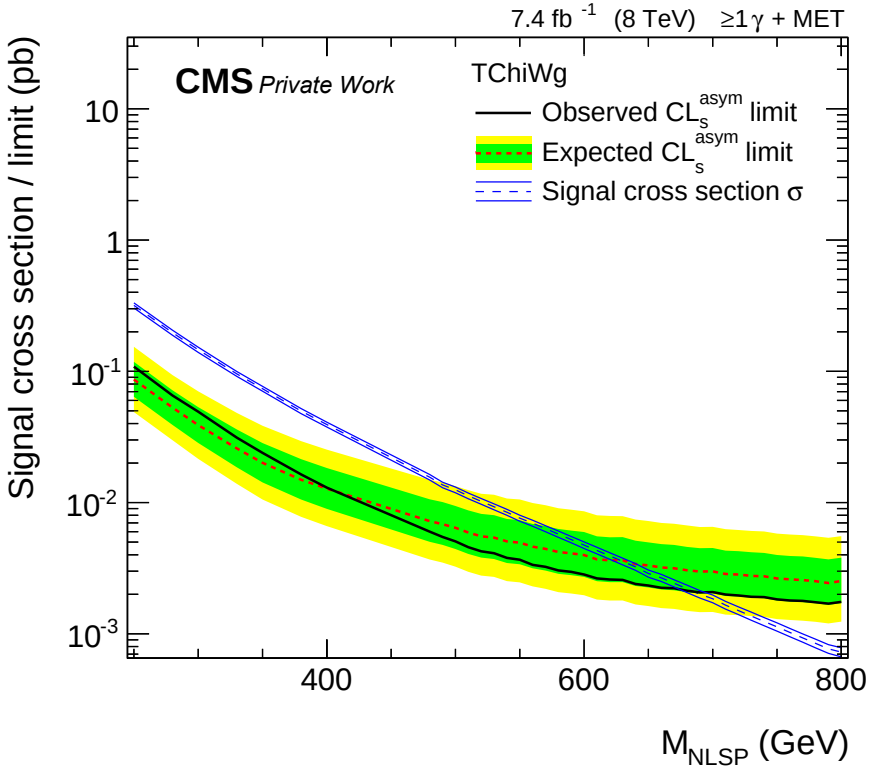

- TChiWg: $M_{NLSP} < 680$ GeV excluded
- Best current limit for TChiWg

Interpretation

Observed upper cross-section limits and exclusion contours for the electroweak GGM signal scan in the M_{wino} – M_{bino} plane

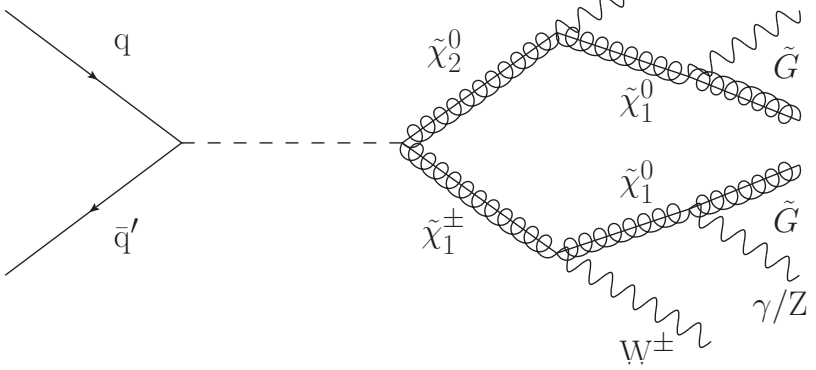

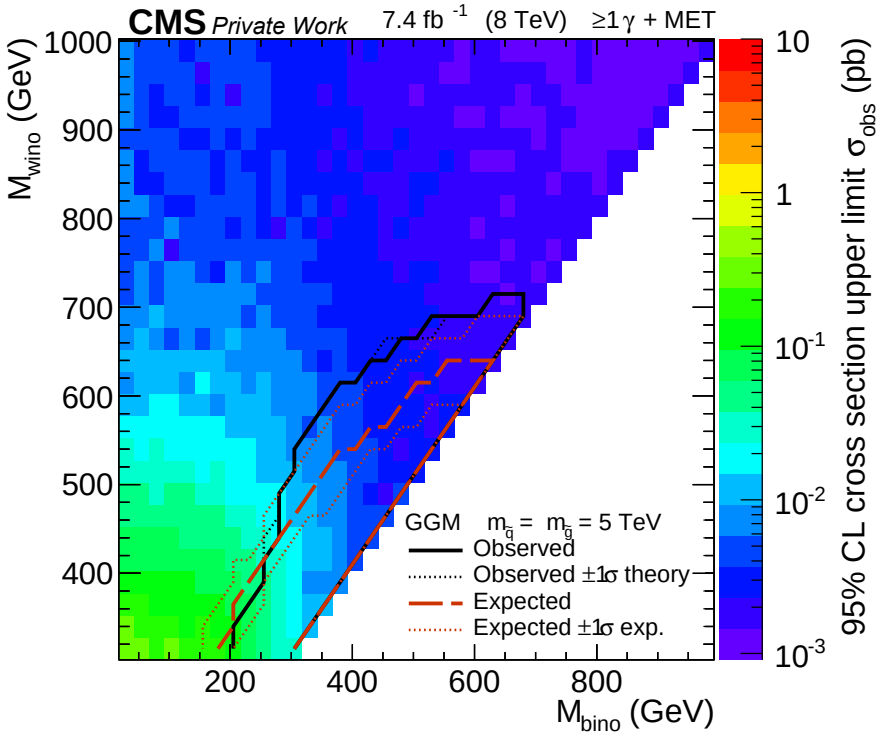

- Analysis sensitive to electroweak production with mass splittings of M_{wino} and M_{bino} up to 200 GeV

Interpretation

Observed upper cross-section limits and exclusion contours for the electroweak GGM signal scan in the $M_{wino} - M_{bino}$ plane and 1D limit for $M_{wino} = M_{bino} + 10$ GeV

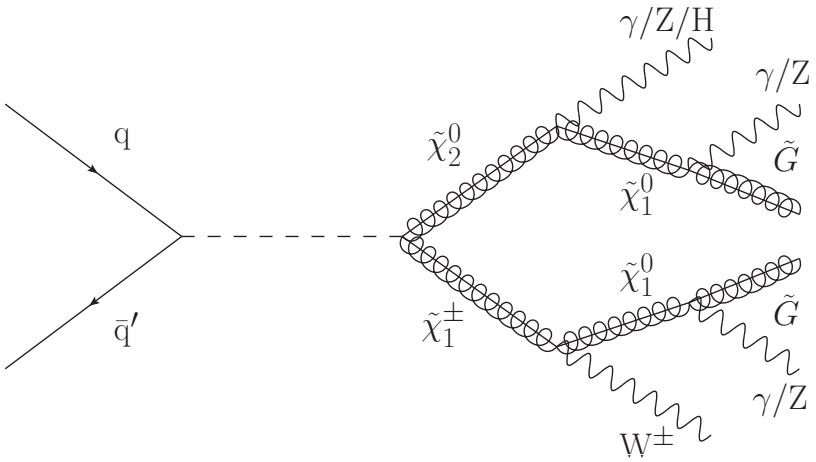

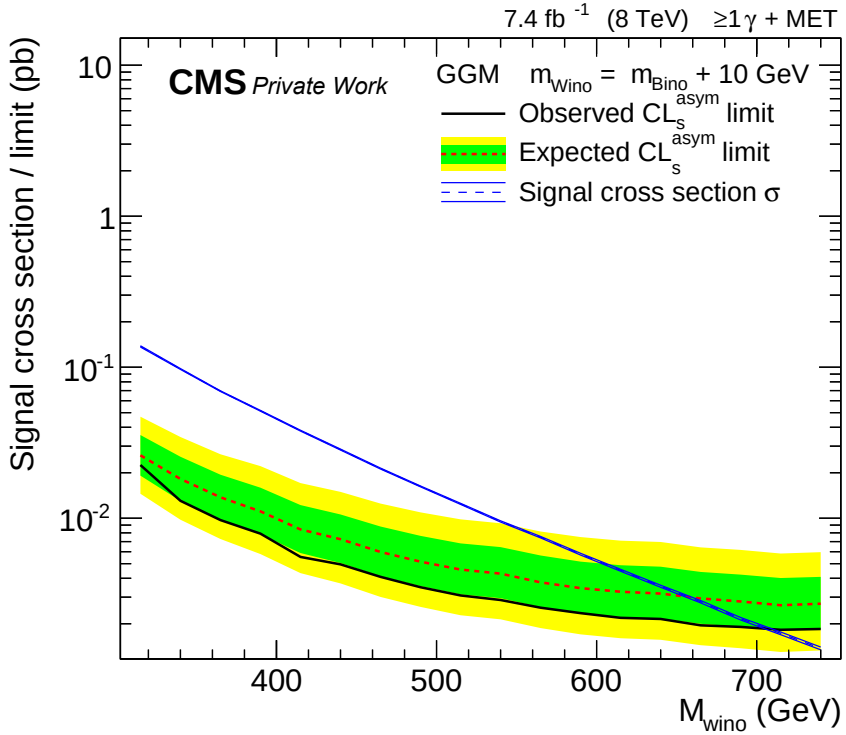

- Analysis sensitive to electroweak production with mass splittings of M_{wino} and M_{bino} up to 200 GeV
- Wino masses below 710 GeV are excluded if $M_{wino} = M_{bino} + 10$ GeV

Summary

Summary:

- Search for new physics in $\gamma + \not{E}_T$ final states using parked data
- New phase space accessible due to parked dataset
- Background prediction fits in all control distributions within uncertainties
  $\rightarrow$ showing the stability of the background estimation methods
  (MC normalization, data-driven method, MC simulation)
- Analysis sets new best exclusion limits in different electroweak signal scenarios

Outlook:

- Analysis (SUS-14-016) approved by CMS and is now in the publication process

Thank you for your attention!

BACKUP

Systematic Uncertainties

Systematic uncertainties:

Source	Sample	Rel. uncertainty (on total BG)
$V\gamma$ normalization	$V\gamma$	24 % (19 %)
γjets normalization	γjets	14 % (1 %)
Tag&Probe fit	$e \to \gamma$	11 % (0.3 %)
Cross-section measurement	$t\bar{t}\gamma$	26 % (3 %)
MC simulation	diboson	50 % (1 %)
MC simulation	multijet	100 % (0 %)
PDF uncertainty on acceptance	signal	$<$0.1$-$11 %
PDF and scale uncertainty	signal	4$-$8 %
Luminosity	diboson, multijet, and signal	2.6 %
Trigger efficiency	diboson, multijet, and signal	1.2 %
Jet energy scale	diboson, multijet, and signal	1$-$2 %

Results

Event yields:

	$\not{E}_T$ sig.$>$ 200, $S_T^\gamma > 600$ GeV	$\not{E}_T$ sig. $<$ 200, $S_T^\gamma > 600$ GeV	$\not{E}_T$ sig. $<$ 200, $S_T^\gamma < 600$ GeV	$\not{E}_T$ sig. $>$ 200, $S_T^\gamma < 600$ GeV
$V\gamma$	4.7 ± 1.2	7.0 ± 1.8	42.3 ± 10.4	5.0 ± 1.3
γjets	0.1 ± 0.1	1.3 ± 0.3	3.4 ± 0.7	$0.0 \pm < 0.1$
$t\bar{t}\gamma$	0.3 ± 0.1	1.1 ± 0.3	5.5 ± 1.5	0.4 ± 0.1
Diboson	0.1 ± 0.1	0.2 ± 0.1	1.5 ± 0.8	0.2 ± 0.1
$e \rightarrow \gamma$	$0.1 \pm < 0.1$	$0.1 \pm < 0.1$	1.6 ± 0.2	0.2 ± 0.1
Multijet	0.0	0.0	0.0	0.0
Background	5.3 ± 1.2	9.7 ± 1.8	54.3 ± 10.6	5.8 ± 1.3
Data	4	4	65	8
Signal	6.9 ± 0.2	1.7 ± 0.1	1.1 ± 0.1	$0.7 \pm < 0.1$
Acceptance [%]	26.5 ± 0.9	6.7 ± 0.3	4.2 ± 0.2	2.6 ± 0.2

Background Prediction - Subdominant Backgrounds

Datadriven e $\rightarrow$ γ fakes:

- Rerun analysis with same photon definition, but $N_{Pixelseed} > 0$ (γ_{pixel})
- Scale distributions with factor $f_{e\rightarrow\gamma}$ / (1 - $f_{e\rightarrow\gamma}$)
- MC: using MC truth info, Data: tag&probe on Z-resonance (Ref.: CMS AN-13-240, Yutaro et al.)
- Simulation: $f^{sim}_{e\rightarrow\gamma} = (0.95 \pm 0.05\ (stat.) \pm 0.09\ (sample))$ %
- Data: $f^{data}_{e\rightarrow\gamma} = (1.48 \pm 0.10\ (measurem.) \pm 0.13\ (sample))$ %
- Closure: generated electron criterion: $\Delta R(gen.\ e, \gamma_{tight}) < 0.1$

From Simulation:

- $t\bar{t}\gamma$
- Diboson (WW, WZ, ZZ)
- QCD (negligible)

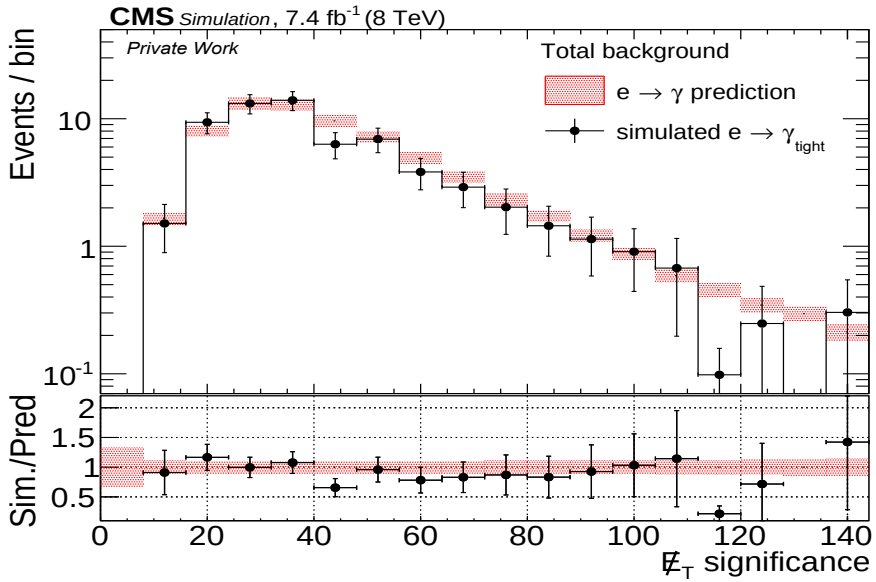

“Parked Data”: New Phase Space accessible

“Parked Data”:

- Dataset with low trigger thresholds
- Direct availability of data limited by data processing
- Free storage space available
- Reconstructed after data taking in 2012
- **New phase spaces** accessible
- $\int \mathcal{L}\, dt = 7.4\ fb^{-1}$, $\sqrt{s} = 8$ TeV

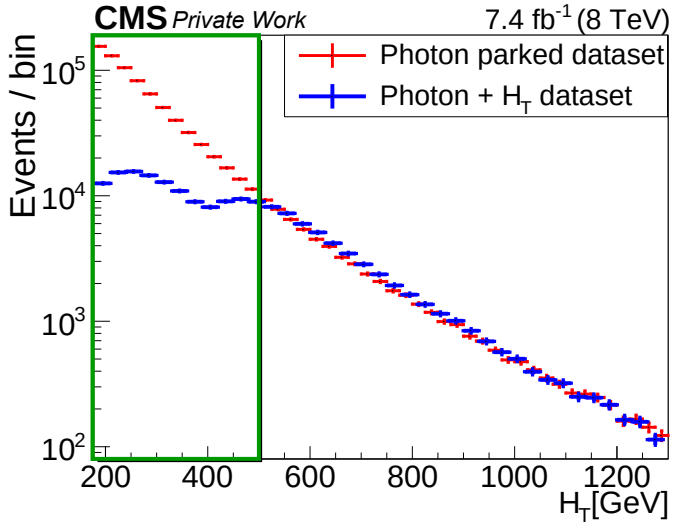

analysis	trigger requirements	sensitivity
this γ analysis (SUS-14-016)	$p_T(\gamma) > 30$ GeV $\not\!\!E_T > 25$ GeV	EWK GGM, TChiNg, TChiWg
“classic” γ + jets (SUS-14-004)	$p_T(\gamma) > 70$ GeV **$H_T > 400$ GeV**	squark-gluino GGM, T5gg, T5Wg
Diphoton (SUS-12-001)	**2 γ**, $p_T(\gamma_1) > 36$ GeV $p_T(\gamma_2) > 22$ GeV	squark-gluino GGM, **EWK GGM:** $M_{wino} < 500$ GeV
EWK H,W,Z (SUS-14-002)	**2 jets (1 b)** + $\not\!\!E_T$ or **2 γ**, or **2 leptons**	**EWK heavy bosons:** $M_{\tilde{\chi}_1^0(h)} < 380$ GeV, $M_{\tilde{\chi}_1^\pm} < 210$ GeV
γ + lepton + $\not\!\!E_T$ (SUS-14-013)	**1 lepton** + 1 γ	T5Wg, **TChiWg:** $M_{NLSP} < 540$ GeV

Background Prediction - Cross Checks

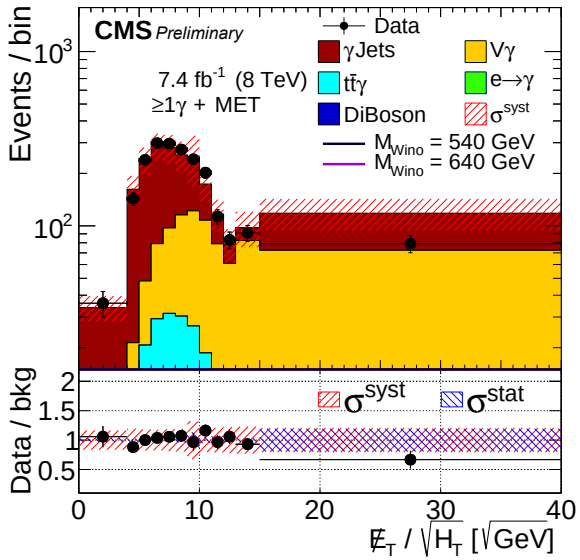

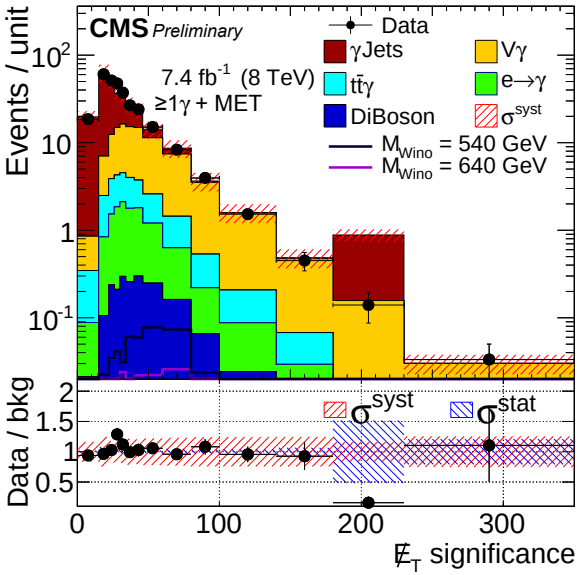

$M_T^{low-high}$	$\not{E}_T$ sig.$^{low-high}$	k_{total}	χ^2/ndf @ min	$k_{V\gamma}$	$\sigma_{k_{V\gamma}}$	$k_{\gamma Jets}$	$\sigma_{k_{\gamma Jets}}$
0 – 300	10 – 60	1.49	1.41	1.02	±0.22	2.30	±0.38
0 – 300	10 – 70	1.49	1.36	1.02	±0.21	2.29	±0.38
0 – 300	10 – 80	1.48	1.44	1.02	±0.21	2.30	±0.38
50 – 300	10 – 50	1.50	1.33	1.01	±0.21	2.26	±0.34
50 – 300	10 – 60	1.49	1.38	1.00	±0.21	2.27	±0.34
50 – 300	10 – 70	1.49	1.34	1.01	±0.21	2.25	±0.34
50 – 300	10 – 80	1.48	1.40	1.00	±0.21	2.26	±0.34
50 – 300	20 – 80	1.38	0.89	0.88	±0.29	-	± -
100 – 300	10 – 50	1.49	1.06	0.95	±0.23	2.21	±0.32
100 – 300	10 – 60	1.48	1.07	0.94	±0.24	2.22	±0.32
100 – 300	10 – 70	1.48	1.03	0.95	±0.23	2.20	±0.31
100 – 300	10 – 80	1.47	1.07	0.94	±0.23	2.20	±0.31
100 – 300	0 – 50	1.57	1.08	0.96	±0.22	2.23	±0.24
100 – 300	0 – 60	1.56	1.10	0.94	±0.22	2.24	±0.24
100 – 300	0 – 70	1.56	1.04	0.95	±0.22	2.23	±0.24
100 – 300	0 – 80	1.55	1.09	0.95	±0.22	2.23	±0.24
incl.	20–60	1.57	0.52	1.02	±0.59	-	± -
incl.	10–80	1.57	0.92	1.15	±0.26	2.20	±0.39
100 – 300	incl.	1.41	2.28	1.09	±0.19	1.95	±0.34
0 – 300	0 – 70	1.54	1.75	1.08	±0.18	2.19	±0.27
0 – 300	0 – 80	1.53	1.83	1.07	±0.18	2.19	±0.27

Sample	Range	k_{total}	χ^2/ndf @ min	$k_{V\gamma}$	$\sigma_{k_{V\gamma}}$	$k_{\gamma Jets}$	$\sigma_{k_{\gamma Jets}}$
$\not{E}_T$ / $\sqrt{H_T}$ [12 bins]	$40 < p_T < 80$	1.42	1.51	1.23	±0.18	1.94	±0.52
	$40 < p_T < 90$	1.40	1.83	1.21	±0.17	1.80	±0.50
	$40 < p_T < 100$	1.40	1.99	1.19	±0.16	1.88	±0.46
	$40 < p_T < 110$	1.40	1.96	1.18	±0.15	1.91	±0.45
	$40 < p_T < 120$	1.40	1.84	1.16	±0.15	1.95	±0.43
$\not{E}_T$ / $\sqrt{H_T}$ [24 bins]	$40 < p_T < 100$	1.40	1.96	1.21	±0.22	1.84	±0.61
$\not{E}_T$ / $\sqrt{H_T}$ [36 bins]	$40 < p_T < 100$	1.4	2.43	1.24	±0.25	1.76	±0.70
H_T	$40 < p_T < 100$	1.40	1.94	1.30	±0.29	1.58	±0.85
$\not{E}_T$ Significance	$40 < p_T < 100$	1.40	1.51	1.17	±0.26	2.02	±0.74